KV-C2553E/C2953E

RM-816

SERVICE MANUAL

Spanish Model

KV-C2553E
Chassis No. SCC-E22E-A
KV-C2953E
Chassis No. SCC-E22H-A

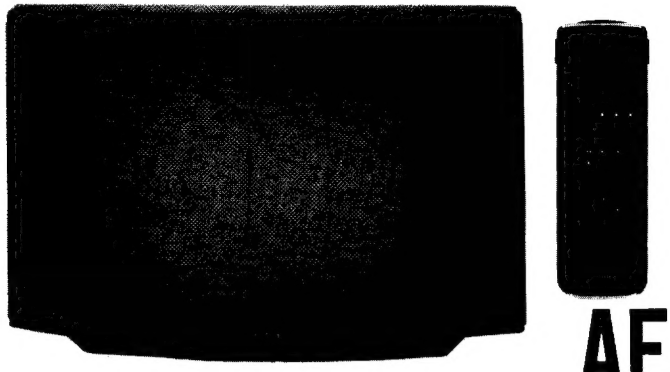

AE-1C CHASSIS

MODELS OF THE SAME SERIES	
KV-C2553E/C2953E	
KV-A2113E/A2513E	
KV-E2523E/E2923E	

SPECIFICATIONS

【KV-C2553E/C2953E】

Television system	B/G/H
Color system	PAL, SECAM, NTSC3.58, NTSC4.43
Stereo system	GERMAN /NICAM stereo
Channel coverage	VHF: E2-E12 UHF: E21-E69
	CABLE TV (1) : S1-S41
	CABLE TV (2) : S01-S05, M1-M10, U1-U10
Picture tube	Black Trinitron tube
	Approx. 63.5 cm (25 inches)
	(Approx. 59 cm picture measured diagonally)
	110 ° -degree deflection
	Approx. 72.4 cm (29 inches)
	(Approx. 68 cm picture measured diagonally)
	110 ° -degree deflection
Inputs	1 21-pin connector:
	CENELEC standard including RGB input.
	2 21-pin connector:
	including S video input
	Flont : Audio and video input jacks:
	phono jack.
	Including S Video input
	Y: 1Vp-p±3dB 75ohm
	C: 0.3Vp-p±3dB 75ohm
Outputs	21-pin connector: CENELEC standard
	Headphones jack: stereo minijack
	External speaker terminals: 2-pin DIN
	Audio output jacks: phono jack (output dependent upon TV settings)
Sound output	30 W + 30 W
Power consumption	97Wh (KV-C2553E)
	107Wh (KV-C2953E)
Dimensions incl.speakers	Approx. 769×495×478 mm (w/h/d) (KV-C2553E)
	Approx. 854×555×510 mm (w/h/d) (KV-C2953E)
Weight incl.speakers	Approx. 38kg (KV-C2553E)
	Approx. 52kg (KV-C2953E)

-Continued on next page-

MICROFILM

TRINITRON® COLOR TV

SONY®

【RM-816】

Remote control system	infrared control
Power requirements	3V dc 2 batteries IEC designation R6 (size AA)
Dimentions	Approx. 75×221×23mm(w/h/d)
Weight	Approx. 230g (including batters)

Accessories supplied	IEC designation R6 batteries (2)
Supplied accessories	RM-816 Remote Commander (1) IEC designation R6 batteries (2)

Design and specifications are subject to change without notice.

21 pin connector (1, 2)

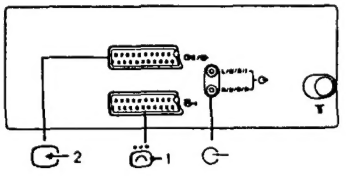

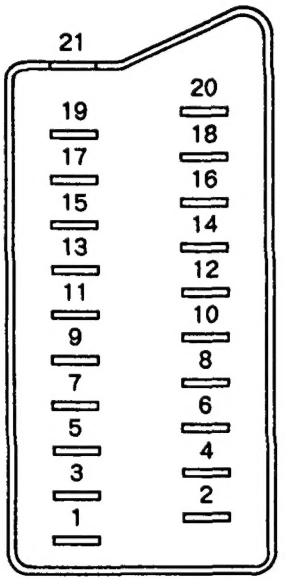

Pin No	1	2	Signal	Signal level
1	○	○	Audio output B (right)	Standard level : 0.5Vrms Output impedance : Less than 1kohm*
2	○	○	Audio input B (right)	Standard level : 0.5Vrms Input impedance : More than 10kohms*
3	○	○	Audio output A (left)	Standard level : 0.5Vrms Output impedance : Less than 1kohm*
4	○	○	Ground (audio)	
5	○	○	Ground (blue)	
6	○	○	Audio input A (left)	Standard level : 0.5Vrms Input impedance : More than 10kohms*
7	○	●	Blue input	0.7V±3dB, 75ohms, positive
8	○	○	Function select (AV control)	High state (9.5–12 V) : Part mode Low state (0–2 V) : TV mode Input impedance : More than 10kohms Input capacitance : Less than 2 nF
9	○	○	Ground (green)	
10	○	○	Open	
11	○	●	Green	Green signal : 0.7V±3dB, 75ohms, positve
12	○	○	Open	
13	○	○	Ground (red)	
14	○	○	Ground (blanking)	
15	○	–	Red input	0.7V±3dB, 75ohms, positive
	–	○	(S signal) croma input	0.3V±3dB, 75ohms, positive
16	○	●	Blanking input (Ys signal)	High state (1–3 V) Low state (0–0.4 V) Input impedance : 75ohmes
17	○	○	Ground (video output)	
18	○	○	Ground (video input)	
19	○	○	Video output	1V±3dB, 75ohms, positive Sync : 0.3V (–3, +10dB)
20	○	–	Video input	1 V±3dB, 75ohms, positive Sync : 0.3V (–3, +10dB)
	–	○	Video input/Y (S signal)	1 V±3dB, 75ohms, positive Sync : 0.3V (–3, +10dB)
21	○	○	Common ground (plug, shield)	

○ connected ● unconnected (open) * at 20 Hz–20 kHz

4 pin connector (S)

Pin No	Signal	Signal level
1	Ground	
2	Ground	
3	Y (S signal) input	1V±3dB 75ohm, positive Sync 0.3V $^{-3}_{+10}$ dB
4	C (S signal) input	0.3V± 3dB 75ohm positive

TABLE OF CONTENTS

Section	Title	Page
1.	**GENERAL**	
	How to Receive NICAM TV Programmes	4
	Turning the TV Unit ON and OFF	5
	TV Channel Presetting	5
	Basic Functions	7
	Special Functions	8
	Use of the Teletext Service	8
	Connections and Optional Functions	10
	General Information	11
2.	**DISASSEMBLY**	
2-1.	Rear Cover Removal	12
2-2.	Chassis Assembly Removal	12
2-3.	A, A1 and J1 Boards Removal	12
2-4.	B1 and V Boards Removal	13
2-5.	Service Position	13
2-6.	Picture Tube Removal	14
3.	**SET-UP ADJUSTMENTS**	
3-1.	Beam Landing	15
3-2.	Convergence	16
3-3.	Focus	18
3-4.	White Balance	18
4.	**CIRCUIT ADJUSTMENTS**	
4-1.	A Board Adjustments	19
4-2.	A1 Board Adjustment	19
4-3.	B1 Board Adjustments	20
4-4.	D Board Adjustments	21
4-5.	J1 Board Adjustments	21
4-6.	V Board Adjustment	22
4-7.	Secondary Adjustments	22
5.	**DIAGRAMS**	
5-1.	Block Diagram	23
5-2.	Circuit Boards Location	29
5-3.	Schematic Diagrams and Printed Wiring Boards	29
5-4.	Semiconductors	62
6.	**EXPLODED VIEWS**	

SAFETY-RELATED COMPONENT WARNING !!

COMPONENTS IDENTIFIED BY SHADING AND MARK ⚠ ON THE SCHEMATIC DIAGRAMS, EXPLODED VIEWS AND IN THE PARTS LIST ARE CRITICAL TO SAFE OPERATION. REPLACE THESE COMPONENTS WITH SONY PARTS WHOSE PART NUMBERS APPEAR AS SHOWN IN THIS MANUAL OR IN SUPPLEMENTS PUBLISHED BY SONY.

How to Receive NICAM TV Programmes

This TV is capable of receiving NICAM, which is a newly developed digital stereo broadcast for TV programmes.
NICAM programmes are broadcast in three ways : stereo, bilingual or monaural sound besides the regular (FM mono) sound. You can select the sound you want to hear by pressing the A/B button.

Action	Result
Press A/B on the Remote Commander.	The NICAM sound mode changes respectively. The selected sound mode differs depending on the broadcast.

The selected sound mode

NICAM sound being broadcast	The sound you hear
Stereo	Stereo → Regular → Stereo (etc.)
Bilingual	A → B → Regular → A (etc.)
Monaural	A → Regular → A (etc.)

On-screen indications and the NICAM indicator
The selected mode (STEREO, MONAURAL, SOUND-A or SOUND-B) appears on screen, and the NICAM indicator on the TV lights up as indicated in the following chart :

The sound being broadcasted	The selected sound	NICAM indicator	Indications on the screen
NICAM+Regular	Stereo	×	STEREO
	A	×	SOUND-A
	B	×	SOUND-B
	Regular	×	MONAURAL
Regular	Regular	○	○

× means that the indicator lights up or the indication appears.
○ means that the indicator does not light up or the indication is not displayed.

The sound heard when you turn on the TV
Depending on the NICAM sound programme, the sound heard when you turn on the TV is different.

NICAM sound programme	The sound heard
NICAM sound and the regular sound are the same	NICAM sound
NICAM sound and the regular sound are different	Regular sound

Note) The layout, etc., will be slighriy different from the operating instructions packed with the units.

SECTION 1
GENERAL

Turning the TV unit ON and OFF

After you have completed the basic preparation your TV is ready to be connected to the mains power supply (220/240V-, 50Hz).

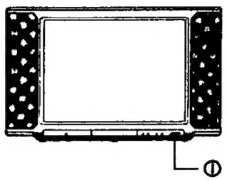

Turning the TV unit ON

Action	Result
1 Press ⏻ on the TV.	The TV will turn on. Note: If the screen remains blank, the TV may be in the standby mode. Press ▢ to switch it on.

Turning the TV unit OFF

A Temporarily	
Press ⏻ to enter the standby mode.	The TV will be in the standby mode. To return to the TV mode press ▢.
B Completely	
Press ⏻ on the TV set.	The TV will be turned off.

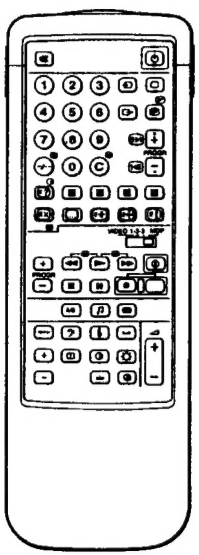

TV channel presetting

After installing the TV set, TV channels must be preset.

TV broadcasting stations broadcast their programmes on certain fixed frequencies (channels). In order to receive these programmes it is necessary to search for the relevant broadcasting station and to set record it as a channel. The "programme number" is the number that the user decides to associate with a certain channel.

For channel settings there are 60 positions available in the memory. In this way all stations broadcasting within the user's country can be received and recorded as a channel.

TV channels automatic presetting

If you are unfamiliar with the transmission frequency of the channels you wish to preset, refer to the section "TV channels automatic presetting". However, if you want to tune them using the frequency of each channel, go to the section "Direct TV channel setting".

To select a button on the "complete" side, take out the remote control unit from its case to reveal the preset buttons, as shown in the illustration.

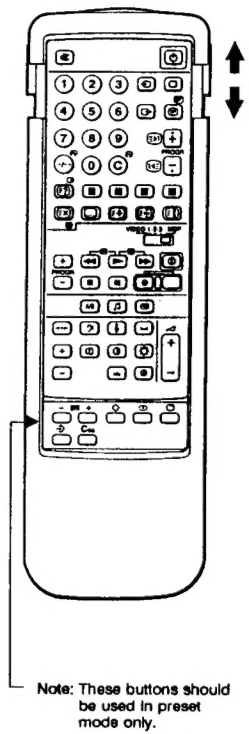

Note: These buttons should be used in preset mode only.

Operation	Result
1 Press ⇨ to begin the preselection.	The programme number flashes.
2 Press PROGR + /– or the remote control unit number buttons to select the channel number to which you want to preset the station. **NOTE:** To select a 2-figure number press the -/-- button. E.g., if you wish to select number 23, press -/-- first, and then 2 and 3.	The programme number on the screen changes.
3 To search for broadcasting stations press ⊞⊞ + and – buttons.	When a broadcasting station is tuned correctly, the search will stop. If you want to skip it, press ⊞⊞ + or – again.
4 Press ◇ to memorize the channel to that which the broadcasting station is tuned.	All data disappears from the screen.
5 To memorize other broadcasting stations repeat steps from 1 to 4.	

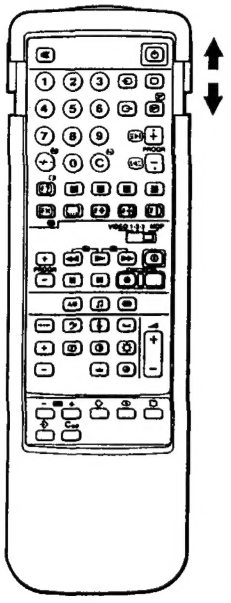

Direct TV channel setting

Operation	Result
1 Press → to begin the presetting.	The programme number begins to flash on the screen.
2 Press PROGR + /– or the number buttons on the remote control unit to select the channel number to which you want to preset the station. **Note** To select a 2-figure number press -/-- button. E.g., if you wish to select number 23, press -/-- first, and then 2 and 3.	The programme number on the screen changes.
3 Press C. If you wish to select a cable station, press C twice.	Indication "C--" ("S--" for cable stations) flashes on the screen
4 By using the number buttons of the remote control unit select the channel number, always with two figures (for "4" press "04"). **Note:** Press the second number within 5 seconds of the first. After 5 seconds the operation is cancelled.	The channel number changes on the screen. Note: In case of mistake, the "X" letter appears on the screen. Repeat once more the operation of step 4.
5 Press ◇ to memorize the channel to which the station is tuned.	All indications disappear from the screen.
To memorize other broadcasting stations repeat the above procedure.	

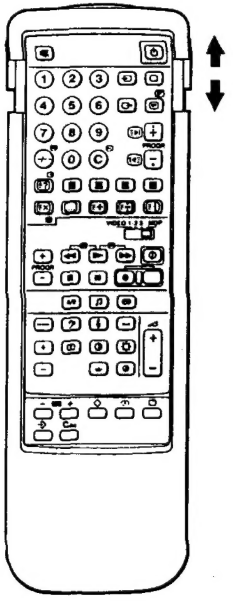

Broadcasting station identification

By associating a name with a certain broadcasting station it is possible to avoid having to remember, each time, in which channel number that particular station has been memorized.
Five different characters are available for station identification.

Operation	Result
1 By using PROGR + or –, or the number keys of the remote control unit, select the programme number to be set for identification.	The programme number to be set for identification appears on the screen.
2 Press →	The number flashes on the screen.
3 Press ▢	The first indication line flashes on the screen.
4 Press the + or – buttons to select a letter of the alphabet, a number, or a blank space.	Alphabetic letters, numbers or a blank space ("–") appear on the screen, in that order.
5 Press ▢	In this way the first character has been set, and the following position now flashes on the screen.
6 Repeat steps 4 and 5, and fill all five available spaces.	
7 Press ◇	All indications disappear from the screen, except the programme number. All indications remaining on the screen have been memorized.

Temporary channel tuning

It is possible to temporarily memorize a channel, even if it has not been preset.

Operation	Result
1 Press C. Press C twice for a cable station.	"C" ("S" for cable stations) indication appears on the screen.
2 Using the number keys of the remote control unit select the channel number, always with two figures (e.g., "04" for channel "4").	The channel will be received, but it will not be set as a programme number.

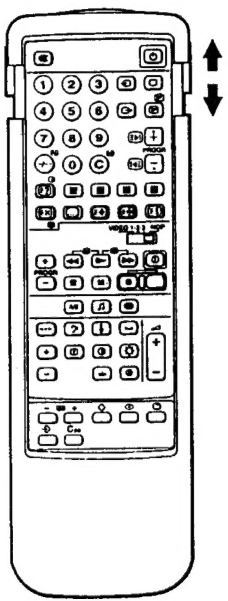

Skipping channels

Using the PROGR + /– buttons you can skip unused programme numbers. However, the skipped numbers may still be called up using the number buttons.

Operation	Result
1 Press ⇢ to begin presetting.	The programme number begins to flash on the screen.
2 By using the PROGR + and – buttons, or the number keys of the remote control unit, select the programme number you wish to skip.	The programme number changes.
3 Press C00 .	Under the programme number, the lowest channel number appears.
4 Press ◇ .	All indications under the programme number disappear from the screen. The skipped programme number will be memorized.

Manual fine tuning

If the picture is not perfect, it is possible to fine tune it manually.

Operation	Result
Press ⊞ + or – repeatedly until the picture is at the optimum.	The indication ←F→ appears on the screen.
Press ⇢ to start preselection.	The programme number starts flashing on the screen.
Press ◇ .	Manual fine tuning has been memorized.

Note: Manual fine tuning will be reset when the channel is selected again.

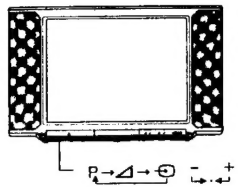

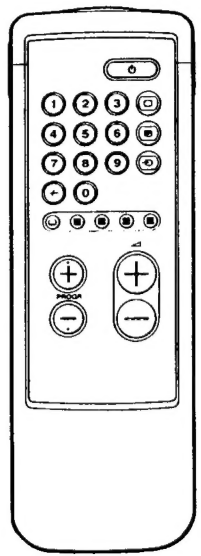

This section introduces you to the basic control functions which are available on the "simple" side of the remote control unit.

Programme selection

Before selecting programmes make sure that TV channels have been memorized.

Operation	Result
Press PROGR + /– buttons or the number keys of the remote control unit. To select a 2-figure number press -/-- button. E.g., if you wish to select number 23, press -/-- first, and then 2 and 3.	04 The selected programme number appears on the screen.

Volume control

Operation	Result
Press ◿ + or –.	The volume indication appears on the screen.

Use of additional functions

Use of other functions with the TV set buttons

It is also possible to select programmes and to adjust the volume by using P→◿→⊖ and →•← + or – buttons, located on the front panel of the TV set.
In this case, press first P→◿→⊖ until the indication P (channel) or ◿ (volume) appears on the screen, and then press →•← + or – buttons.

Use of teletext service

Press ⊛. To return to the TV mode, press ▢. For further information on the teletext service see page 12.

Selection of the video input

Press ⊖. To return to the TV mode, press ▢. For further details, refer to page 16.

Special functions

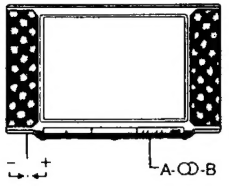

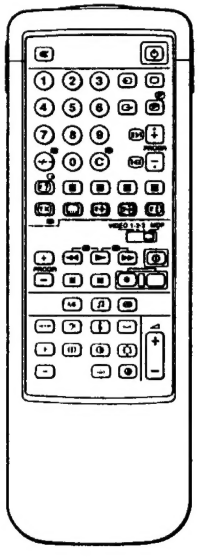

This section explains the use of functions for adjusting pictures and sound.
Use the "complete" side of the remote control unit.

Use of special functions

The following functions can be used.

Function	Operation	Reset
Indication display	Press	Press again.
Sound muting	Press	Press again.
Language selection for bilingual programmes.	Press A/B. The selected language is displayed by the relevant indication on the screen.	Press A/B.
Sound adjustment for music programmes.	Press	Press again.
Use of special sound effects.	Press	Press again.
Time display (only during teletext broadcasting).	Press	Press again.

Picture and sound adjustment

Although the picture and sound have been adjusted at the factory, you might want to adjust them to your own taste. To do this, please follow the steps below.

To Adjust:	Press:	Then:	Result: (+ ↔ –)
Picture:			
Colour intensity			More ↔ Less
Contrast		+	More ↔ Less
Brightness			Bright ↔ Dark
Hue (for NTSC only)		–	Reddish ↔ Greenish
Sharpness			More ↔ Less
Sound:			
Bass		+	More ↔ Less
Treble			More ↔ Less
Balance		–	Left ↔ Right

To reset the picture and sound to factory set levels, press →•←.

On the set: Press the →•← and +/– buttons simultaneously.

Use of the teletext service

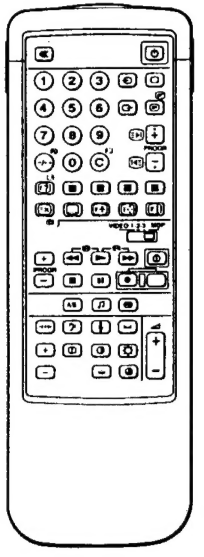

Through the teletext service a great deal of information can be received at any time. Broadcasting stations make this service available through TV broadcasts. To use the teletext service, use the green keys on the "complete" side of the remote control unit. When the "simple" side of the remote control unit is used, only the basic functions are available.

How to display teletext service

Operation		Result
1	Select the channel you want to watch.	The channel changes on the screen.
2	Press	If there is no teletext signal, the indication "Page 100" appears on the screen.
3	Use the number keys of the remote control unit to insert the three figures corresponding to the desired teletext page. **Note** In case of a mistake, press any three numbers, and then repeat the operation with the correct numbers.	The selected page number appears on the screen. After a few seconds, the selected page appears on the screen.
	To return to normal TV programmes: Press .	
	To change teletext channel: First press to return to the TV mode, and then repeat steps 1 to 3.	

Note: A weak TV signal may cause trouble in the use of teletext.

Use of special teletext functions

Required function	Operation	Result (on the screen)
Page index required.	Press (INDEX).	Page index appears.
Sub-pages required (page 888).	Press .	The sub-page appears (page 888).
Access to previous or following pages.	Press (PAGE +) or (PAGE –).	The preceding or the following page appears.

Required function	Operation	Result (on the screen)
Superimposition of the teletext on the TV programme.	In the TV mode, press ▣ twice. *To return to the normal teletext function press ▣ again.*	Teletext information will appear superimposed on the TV programme.
To prevent page changes due to page updating.	Press ⏸ (STILL). Press ▣ (TXT/MIX) to return to the normal function.	The ⏸ (STILL) symbol appears on the screen.
Magnification of teletext characters.	Press ⊕ once to magnify the upper half of the screen. Press twice to magnify the lower half of the screen. By pressing the button three times the normal vision is restored.	The upper or the lower half of the page is magnified.
Display of hidden information *(answers to quizzes, etc.).*	Press ↺ (RIV). Press again to hide the answers.	The information is displayed.
Watching a programme while the teletext searches for the required page.	1. Ask again for the page.	The number is displayed.
	2. Press ✕	TV programme is displayed.
	3. When the required page has been found, the page number will be displayed.	
	4. Press ▣ to display the page.	The desired page will be displayed.
Display of a page at a preset time.	*1. Request the page.*	*The selected page will be* displayed.
	2. Press ⏲ (MEM.T).	In the lower part of the screen the indication "T****" appears.
	3. Set the required time by using the number keys, and by inputting four figures (e.g. 0730 for "7:30").	The required time is displayed on the screen.
	To watch TV programmes until a preset time Press ⏲ (CANC.). At the required time, the selected page appears in the upper part of the screen. Press ▣ to display the page. **To cancel the request** Display the teletext page and then press ⏲ (CANC.M.).	

Note: Depending on the teletext service, certain functions may not be available.

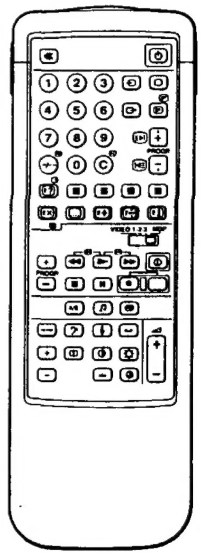

Use of the FASTEXT function

The FASTEXT function allows rapid access, at the touch of a single button, to the teletext functions. In the lower part of the screen, a colour coded index will be displayed when a FASTEXT teletext page is broadcasted. Each colour corresponds to the colored keys on the remote control unit.

Operation

Operation	Result
Press one of the coloured keys on the remote control unit corresponding to the coloured indications of the FASTEXT teletext page.	The selected teletext page appears on the screen.

Note:
The correct use of the FASTEXT function depends on the signal being broadcast by the TV stations. Some TV stations may not broadcast FASTEXT teletext signal.

Connections and optional functions

This TV set may be connected to other audio/video machines, such as videocameras, VTRs, videodisc players, or stereo systems.

Connection to an external audio/video system

This TV set incorporates three groups of connectors, for input and output to the TV signal. Each group has the following characteristics.

Connector	Input signal	Output signal
1	Normal audio/video signal or RGB signal	TV tuner audio/video signal
2/	Normal audio/video signal and S-video signal	Audio/video signal from a selectable source
, , front panel	Normal audio/video signal and S-video signal	No signal

Connection of a TV set

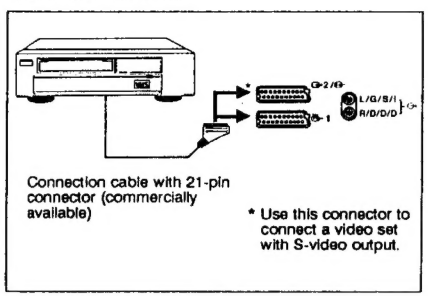

Connection of an audio unit

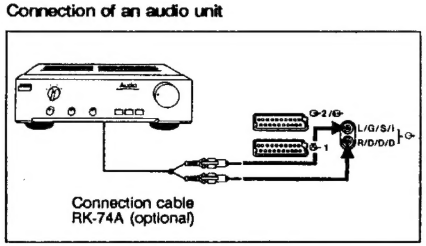

Connection to a computer with RGB output

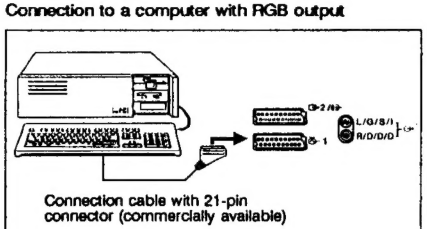

Temporary connection of video apparatus
For a temporary connection (e.g. of a videocamera) use the front panel terminals.

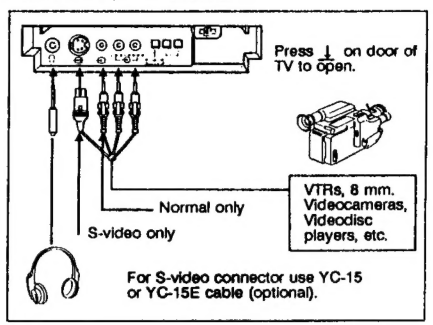

Connection of a videotape recorder through the connector
Connect the antenna input (AERIAL-IN) of the TV set to the antenna output (AERIAL-OUT) of the videotape recorder.

S-video input (Y/C input)
The video signal is formed by two separate signals: the luminance (Y) and the chrominance (C). Through the separation of the two signals it is possible to improve picture quality (luminance in particular), preventing reciprocal interference. This TV set features two S-video sockets able to directly receive this type of signal.

Pictures with distortion
Move the TV set away from the videotape recorder if pictures or sound become distorted.

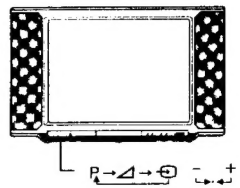

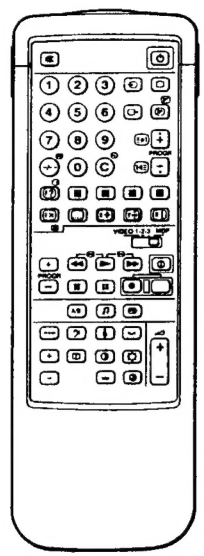

Video programme playback

Using the input selector, pictures coming from a videotape recorder connected to the TV sets input may be played back.

Operation

Operation	Result
Select the desired video input by pressing repeatedly.	1 — The symbol of the selected input appears on the screen (see table below).
Press button to return to TV mode.	

Selectable inputs

Symbol	Selected input
1	Audio/video signal from 1 connector.
	RGB signal from 1 connector.
2	Audio/video signal from 2/ connector.
2	S-video signal (from a VTR with S-video output) from 2/ connector.
3	Audio/video signal from , connector located on the front panel.
3	S-video signal from S-video (4 pin) connector located on the front panel.

Input can be selected also with the P buttons of the TV set.

In this case, first select , and then press the + /– buttons to select the desired input.

Selection of video output

The 2/ connector may output 4 video signals. Select the outgoing video signal in the following way.

Operation

Operation	Result
Press repeatedly to select the desired video output.	1 — The selected video output symbol appears on the screen (see the table following).

Output signal

Symbol	Selected output
1	Audio/video signal from 1 connector.
2	Audio/video signal from 2/ connector.
3	Audio/video signal from and connectors.
TV	Audio/video signal from T-type antenna connector .

General information

Components identification

A

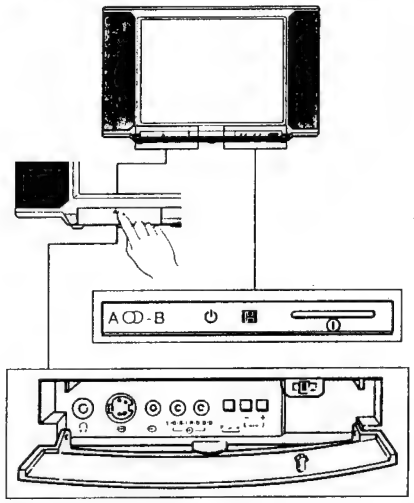

B

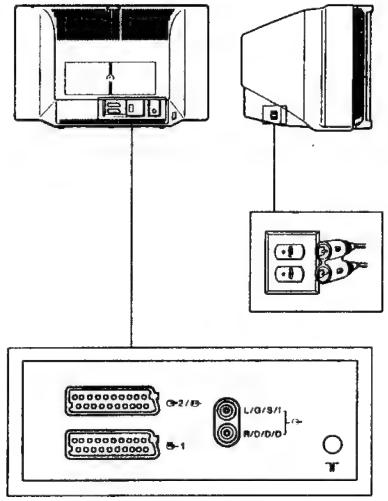

C

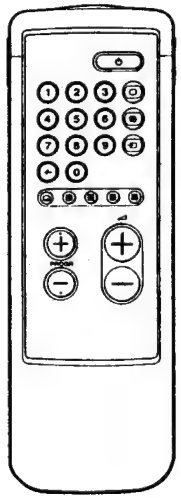

D

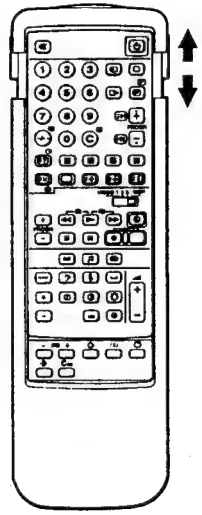

General information

This section briefly describes controls of the TV set and the remote control unit, and their relevant functions.

A	TV set front panel
Indication	Description
	Power switch
	Standby switch
A - - B	Bilingual function indications
	Headphones connector (stereo mini-jack)
	Input connectors (S-video/video/audio)
P	Function selector (programme/volume/input)
– +	Function adjustment keys

B	TV set rear panel
Indication	Description
	Speaker connectors (upper: left speaker; lower: right speaker)
2/	Connector 2, Euro AV (SCART, 21-pin). S-video in/video in/TV/video out signals.
1	Connector 1, Euro AV (SCART, 21-pin). RGB in/video in/TV/out signals.
	Audio output connectors (RCA pin)
	Antenna connector (of IEC standard)

C	Remote control unit — simplified side
Indication	Description
	Input selector
	Teletext service key
	FASTEXT operation buttons
	TV set power switch and TV mode selector
	Standby key
1,2,3,4,5, 6,7,8,9,0	Number keys
-/--	Channel selection key/ 2-figure programmes
+ /–	Volume adjustment key
PROGR + /–	Programme selection key

D	Remote control unit — complete side
Indication	Description
	Sound muting key
	Standby key
1,2,3,4,5, 6,7,8,9,0	Number keys
	Input selector
	TV set power switch and TV mode selector
	Output selector
	Teletext key
	Music programme key
A/B	Bilingual programmes language selection
-/--	Channel selection key/ 2-figure programmes
C	Channel direct selection key
	Special sound effect key
	Time display
	Teletext operation keys
	FASTEXT operation buttons
	Display key
	Reset key
+ /–	Volume adjustment keys
PROGR + /–	Programme selection keys
+/–	Image and audio adjustment keys
VIDEO 1/2/3, MDP	Video unit selector
	Video units function key
C00	Programme cancelling key
	Channel presetting key
– +	Channel tuning keys
	Channel storing keys
	Broadcasting stations identification key

SECTION 2
DISASSEMBLY

2-1. REAR COVER REMOVAL

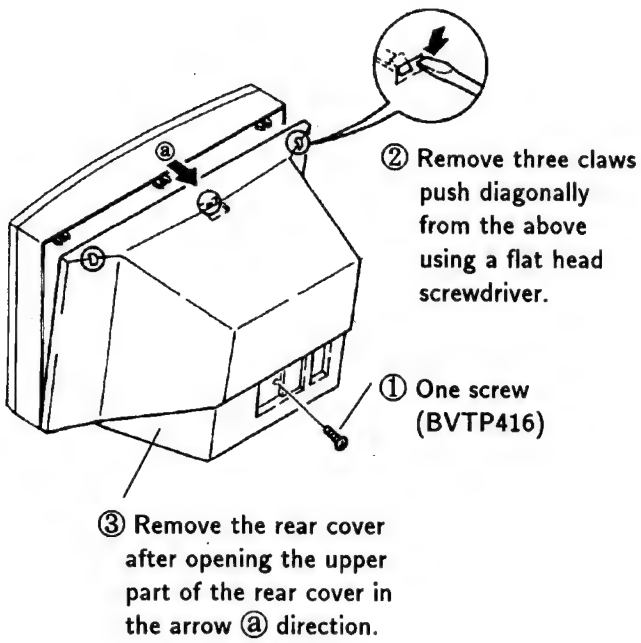

2-2. CHASSIS ASSEMBLY REMOVAL

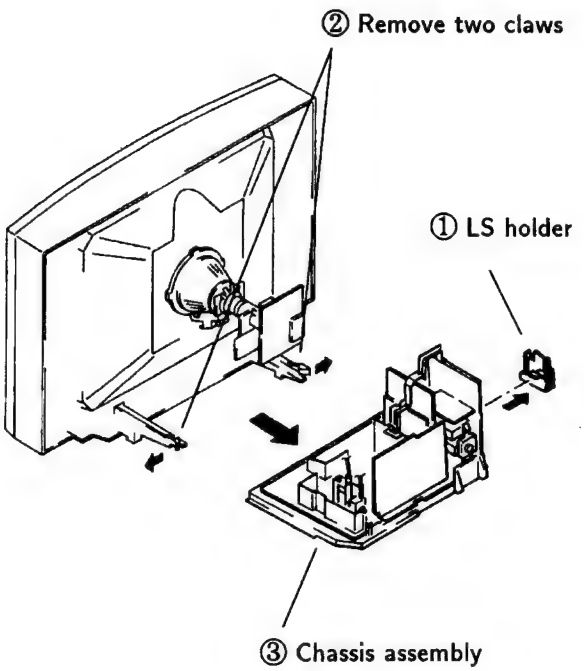

2-3. A, A1 AND J1 BOARDS REMOVAL

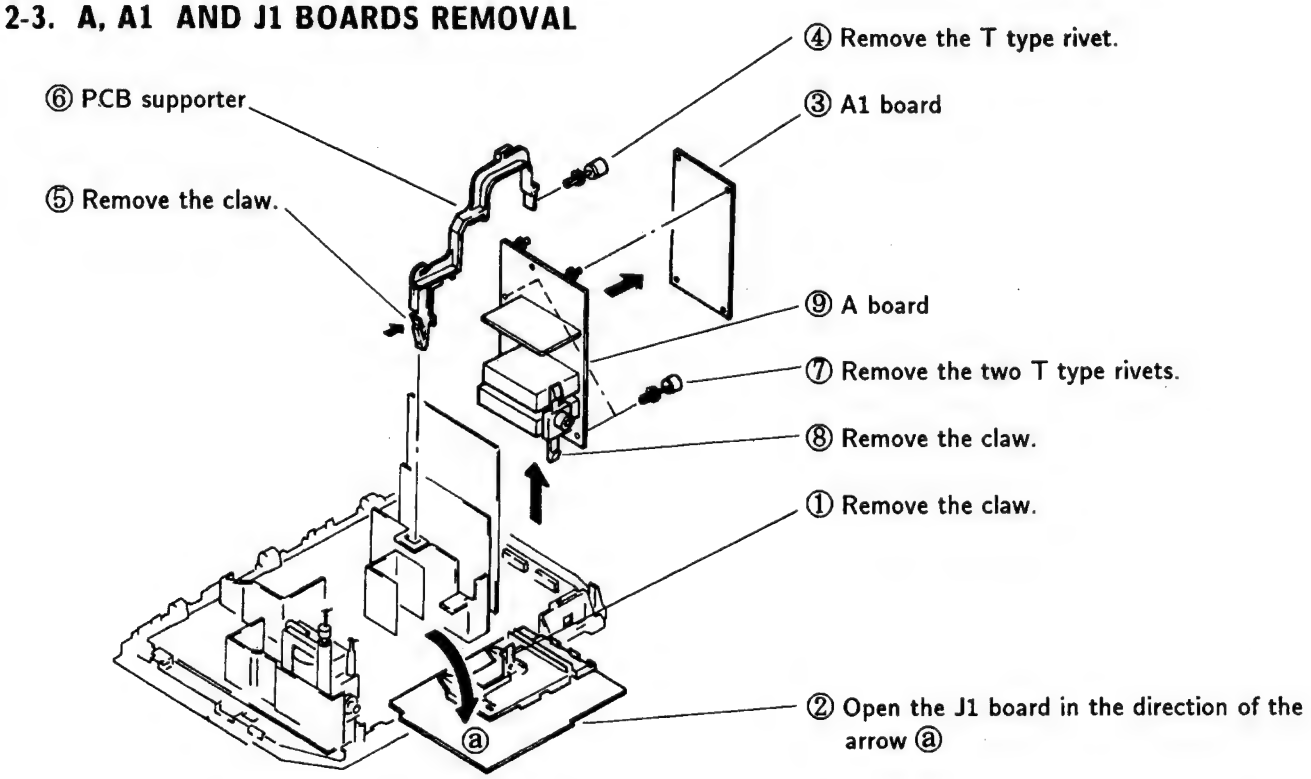

2-4. B1 AND V BOARDS REMOVAL

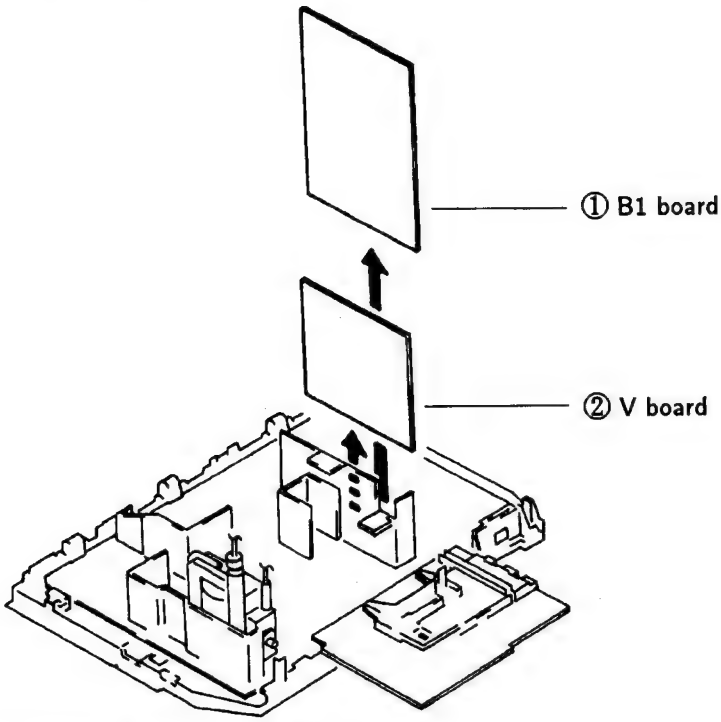

Note : 10 pin extension cable (S-0945-001-0)

2-5. SERVICE POSITION

* Remove the connector bracket from the main chassis assembly and then perform the following servicing.
(Refer to 2-2. CHASSIS ASSEMBLY REMOVAL.)

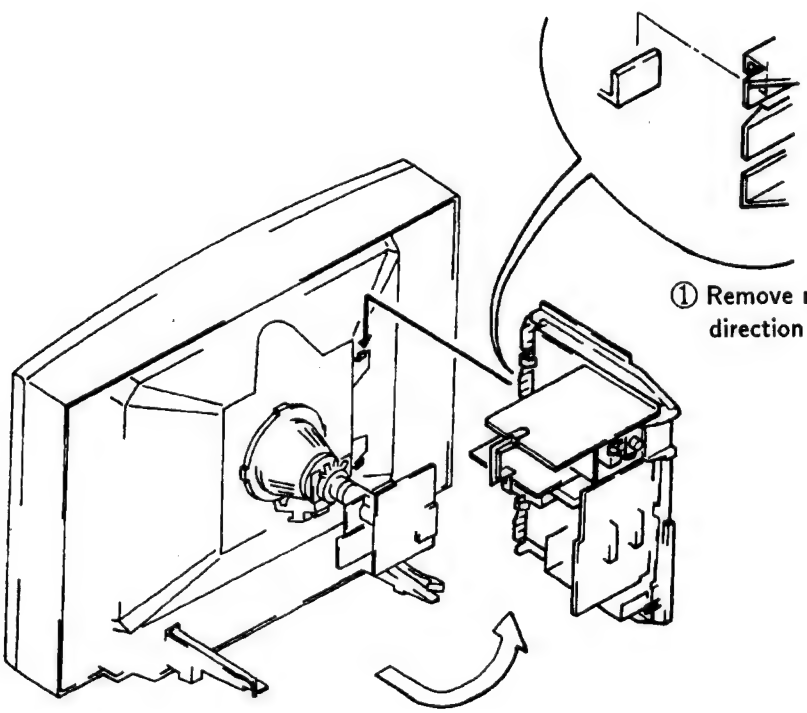

① Remove main chassis assembly in the direction of the arrow.

2-6. PICTURE TUBE REMOVAL

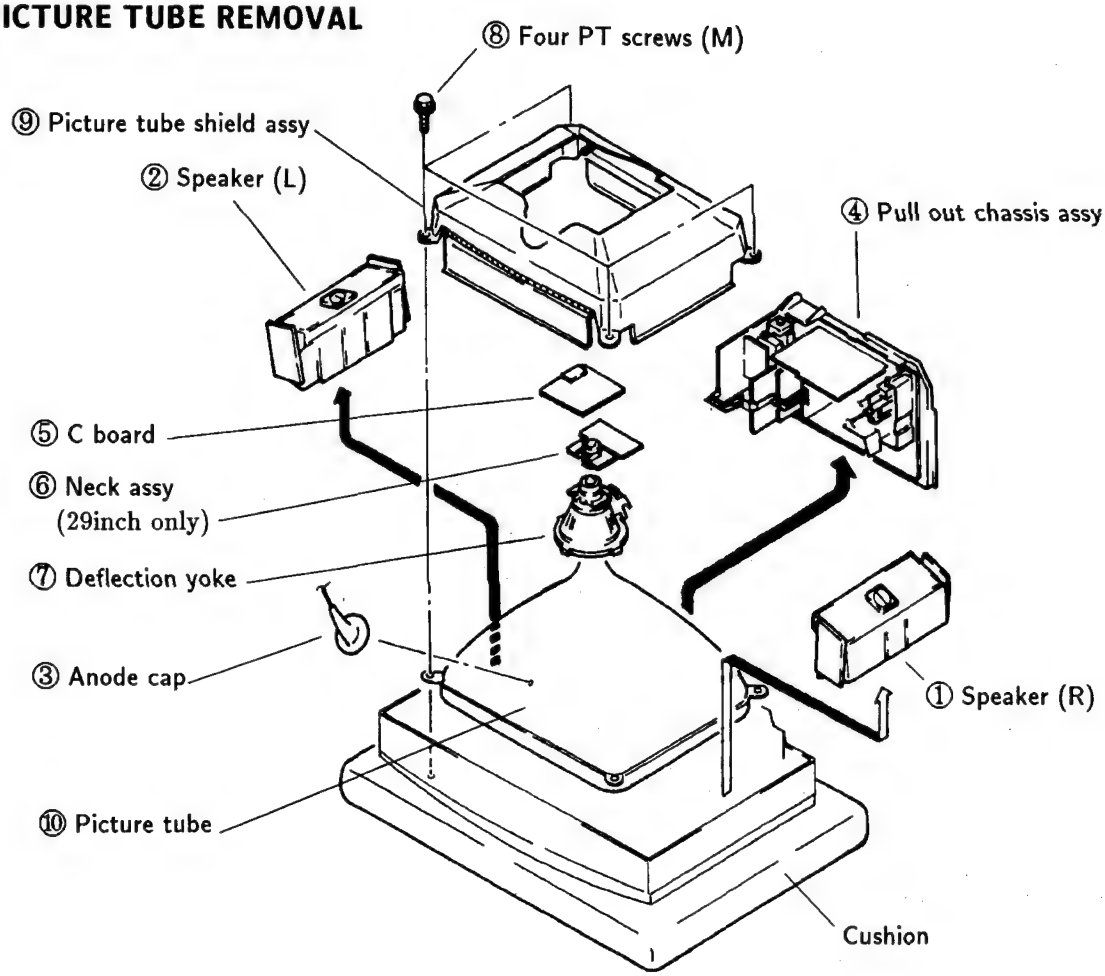

· REMOVAL OF ANODE-CAP

· REMOVING PROCEDURES

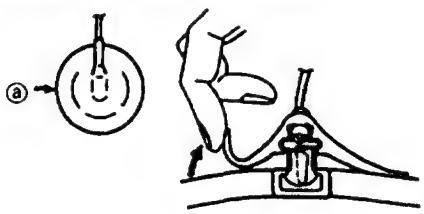

① Turn up one side of the rubber cap in the direction indicated by the arrow ⓐ.

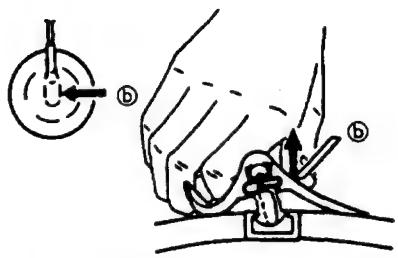

② Using a thumb pull up the rubber cap firmly in the direction indicated by the arrow ⓑ.

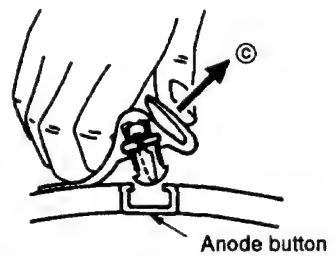

③ When one side of the rubber cap is separated from the anode button, the anode-cap can be removed by turning up the rubber cap and pulling up it in the direction of the arrow ⓒ.

· HOW TO HANDLE AN ANODE-CAP

① Don't hurt the surface of anode-caps with sharp shaped material!

② Don't press the rubber hardly not to hurt inside of anode-caps!
A material fitting called as shatter-hook terminal is built in the rubber.

③ Don't turn the foot of rubber over hardly!
The shatter-hook terminal will stick out or hurt the rubber.

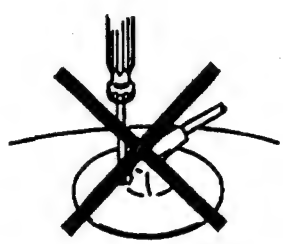

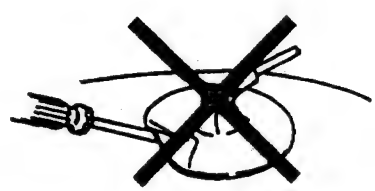

SECITON 3
SET-UP ADJUSTMENTS

- When complete readjustment is necessary or a new picture tube is installed, carry out the following adjustments.
- Unless there is specific instruction to the contrary, carry out these adjustments with the rated power supply.
- Unless there is specific instruction to the contrary, set the controls and switches this way :
  - ◑ Contrast ·····80%
    (or remote control normal)
  - ☼ Brightness ·····50%
- Carry out the following adjustments in this order:
  1. Beam landing
  2. Convergence
  3. Focus
  4. White balance

Note : Testing equipment required
1. Color bar/pattern generator
2. Degausser
3. DC power supply
4. Digital multimeter
5. Oscilloscope

Preparations :
- In order to reduce the influence of geomagnetism on the set's picture tube face it east or west.
- Switch on the set's power and degauss with the degausser.

3-1. BEAM LANDING

1. Input the white signal with the pattern generator.
   Contrast
   Bightness } normal
2. Position neck ass'y as shown in Fig 3-2.
3. Set the pattern generator raster signal to red.
4. Move the deflection yoke to the rear and adjust with the purity control so that the red is at the center and the blue and the green take up equally sized areas on each side.
   (See Figures 3-1 through 3-3.)
5. Move the deflection yoke forward and adjust so that entire screen is red. (See Figure 3-1.)
6. Switch the raster signal to blue, then to green and verify the condition.
7. When the position of the deflection yoke has been decided, fasten the deflection yoke with the screws.
8. If the beam does not land correctly in all the corners, use a magnet to adjust it.
   (See Figure 3-4.)

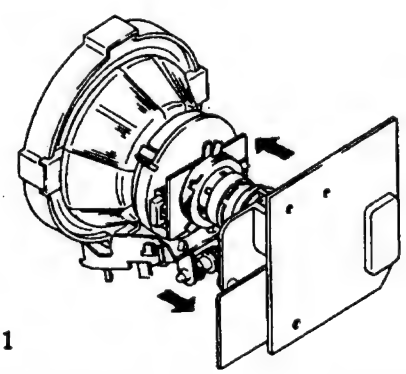

Fig. 3-1

Fig. 3-2

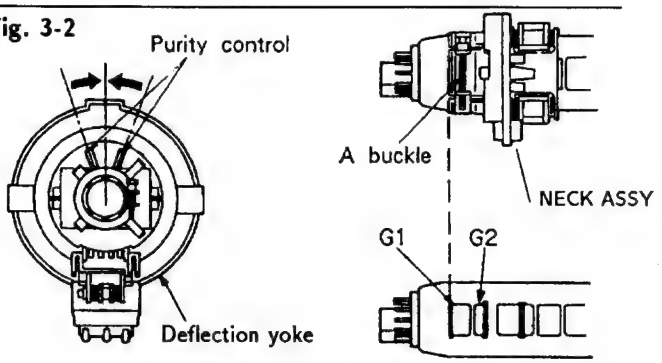

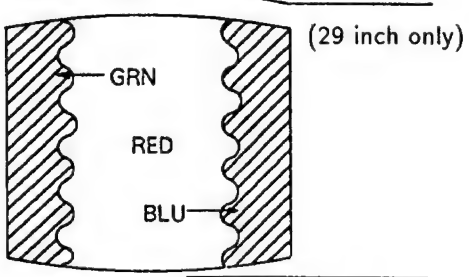

Fig. 3-3

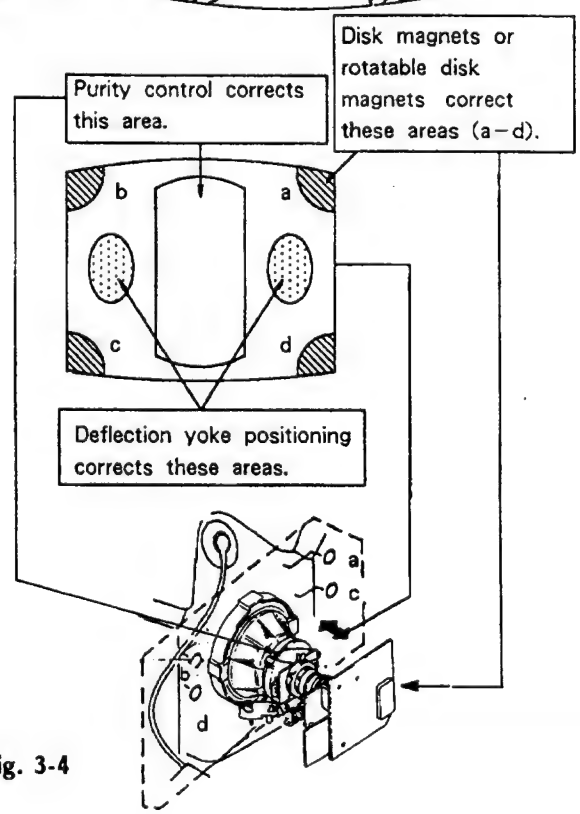

Fig. 3-4

3-2. CONVERGENCE

Preparations :

- Before starting this adjustment, adjust the focus, horizontal size, and vertical size.
- Minimize the brightness setting.
- Provide dot pattern.

(1) Horizontal and vertical static convergence

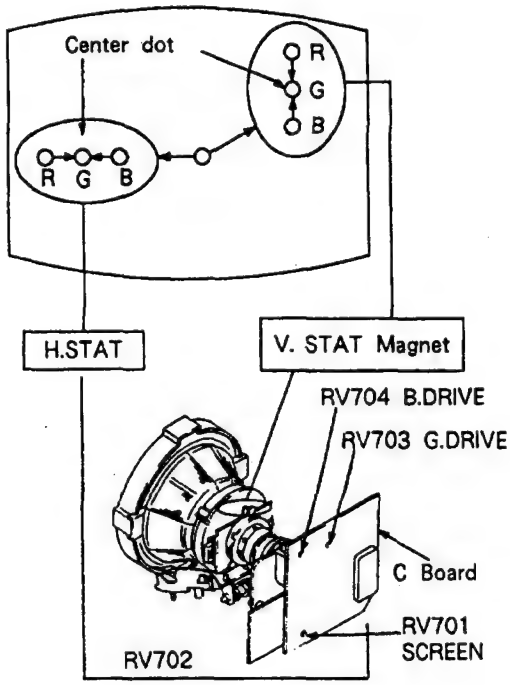

1. (Moving horizontally), adjust the H.STAT control so that the red, green, and blue points are on top of each other at the center of the screen.
2. (Moving vertically), adjust the V.STAT magnet so that the red, green, and blue points are on top of each other at the center of the screen.
3. If the H.STAT variable resistor cannot bring the red, green, and blue points together at the center of the screen, adjust the horizontal convergence with the H.STAT variable resistor and the V. STAT magnet in the manner given below.
   (In this case, the H.STAT variable resistor and the V.STAT magnet influence each other)

- Tilt the V.STAT magnet and adjust the static convergence by opening or closing the V.STAT magnet.

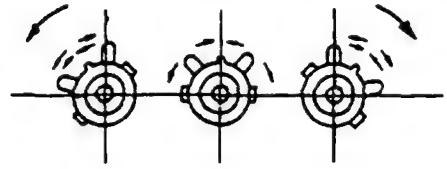

4. If the V.STAT magnet is moved in the direction of the ⓐ and ⓑ arrows, the red, green, and blue points move as shown below.

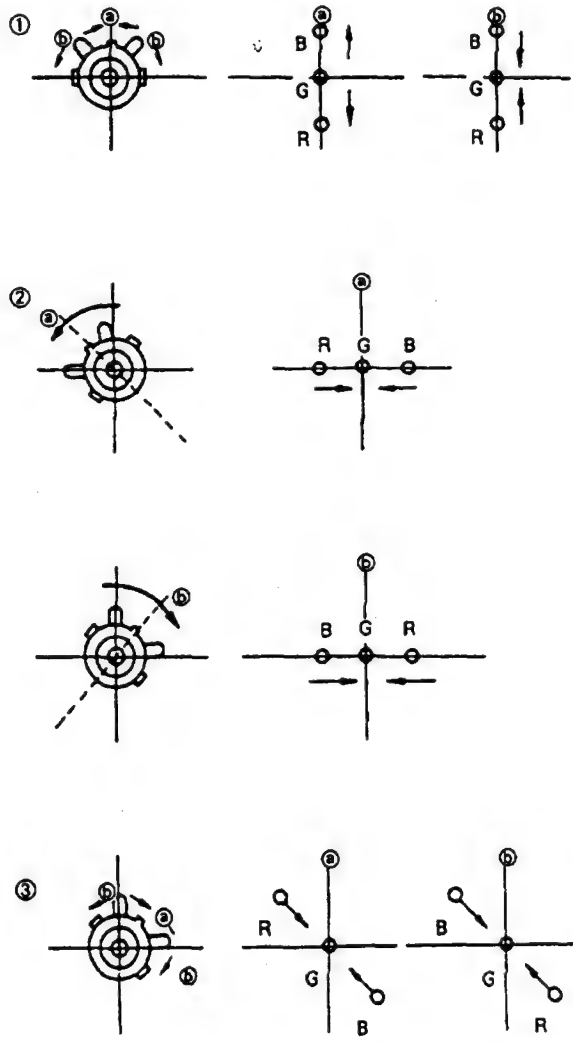

- Operation of BMC (Hexapole) Magnet

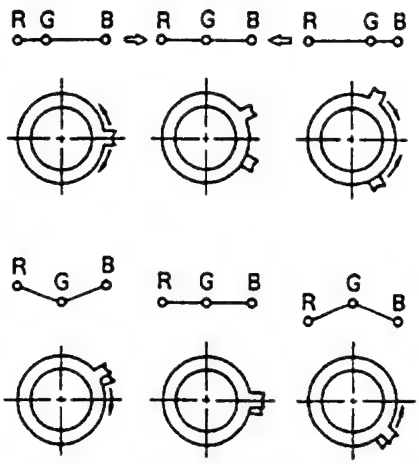

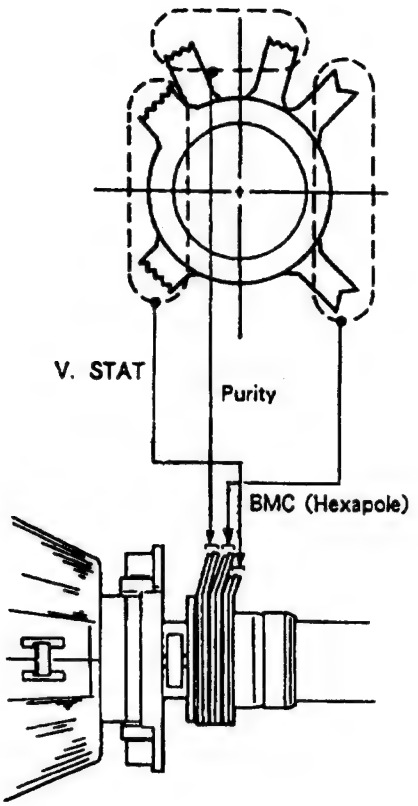

- The respective dot positions resulting from moving each magnet interact, so be sure to perform adjustment while tracking.
  Use the H.STAT VR to adjust the red, green, and blue dots so they coincide at the center of screen (by moving the dots in the horizontal direction).

(2) Dynamic convergence adjustment
Preparations :

Before starting this adjustment, adjust the horizontal static convergence and the vertical static convergence.

1. Slightly loosen the deflection yoke screws.
2. Remove the deflection yoke spacer.
3. Move the deflection yoke as shown in the figure below and optimize the convergence.
4. Tighten the deflection yoke screws.
5. Install the defelection yoke spacer.

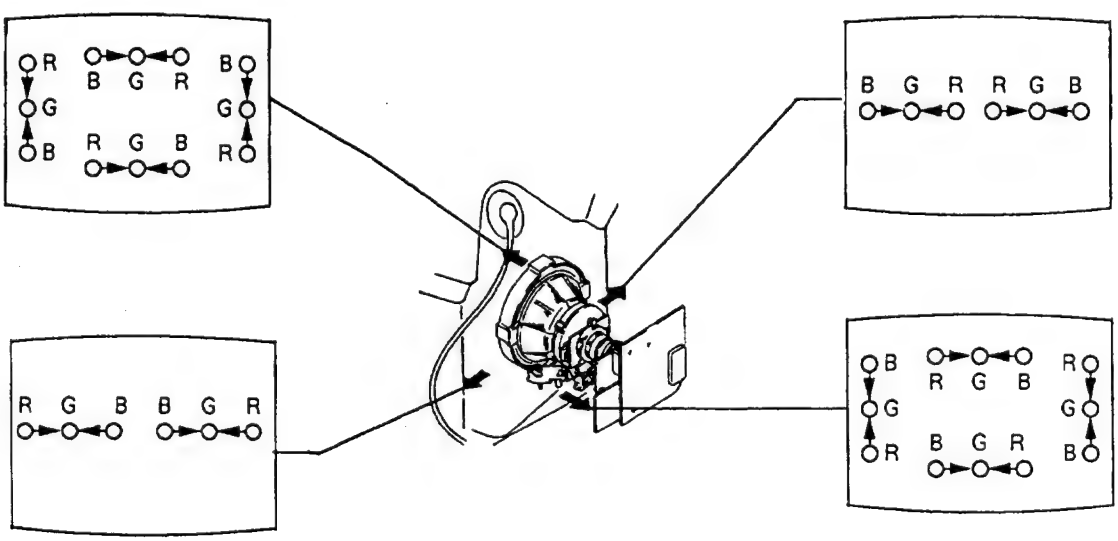

(3) Screen corner convergence

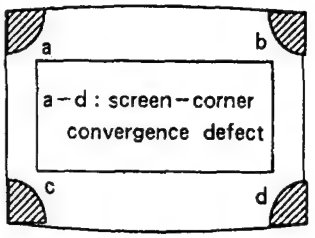

Install the permalloy assembly for the section with faulty.

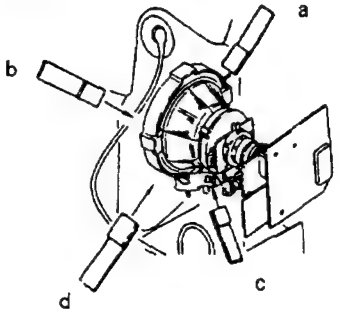

Permalloy

3-3. FOCUS

Adjust the focus to optimize the screen.

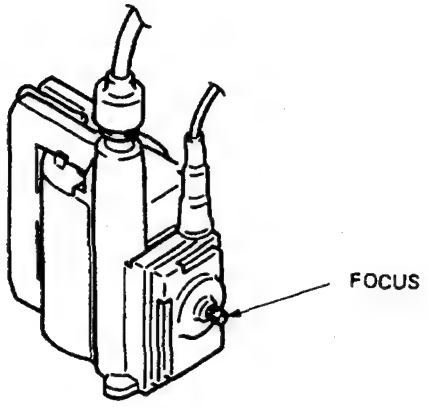

3-4. WHITE BALANCE

[Screen G2 setting]

1. Input the dot signal from the pattern generator.
2. Set the picture brightness control to its lowest level.
3. Apply 170V DC to the R, G, and B cathodes with an external power supply.
4. While watching the picture, adjust G2 control RV701 (Screen) to the point just before the return lines disappear.

[White balance adjustment]

1. Input an all-white signal from the pattern generator.
2. Set the picture brightness and color controls to their normal levels.
3. Use the RV704 (B Drive) and RV703 (G Drive) to adjust white balance.

In the adjustments below, have the picture color and brightness settings at their normal levels unless there is a specific instruction to the contrary.

SECTION 4
CIRCUIT ADJUSTMENTS

4-1. A BOARD ADJUSTMENTS

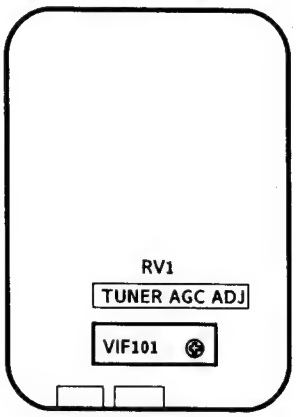

A BOARD (COMPONENT SIDE)

TUNER AGC ADJUSTMENT (VIF101, RV1)

1. Align with an appropriate signal between stations.
2. Adjust RV1 so that snow noise and cross modulation just disappear from the picture.

IFG5.5S SIF

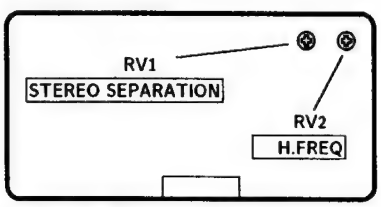

IFG5.5S SIF -component side-

STEREO SEPALATION ADJUSTMENT (RV1)

1. Input stereo signals. (L-CH 400Hz, R-CH 1KHz)
2. Check the stereo indicator.
3. Connect on oscilloscope to pin⑧ (CH1) of CN1 through band pass filter of 1KHz
4. Adjust RV1 so that 1KHz voltage goes down to the minmum.

H FREQ (RV2)

1. Input a PAL COLOR BAR signal, then connect a jumper between pin⑫ IC4 and GND.
2. Connect a frequency counter to pin④ IFG5.5S (HP) of CN1 through a probe of 10 : 1.
3. Adjust RV2 (H.FREQ) 15.625±50Hz.
4. After adjustment, remove the jamper.

4-2. A1 BOARD ADJUSTMENT

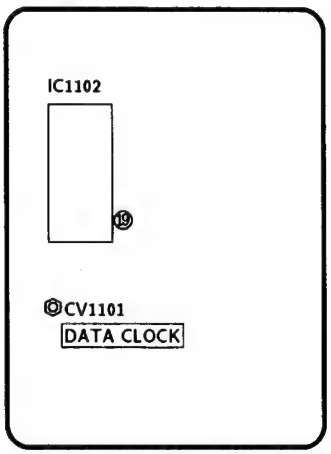

A1 BOARD (COMPONENT SIDE)

DATA CLOCK Adjustment (CV1101)

1. Tune in a no signal.
2. Connect a frequency counter to pin ⑲ of IC1102 (PCLK) through a probe of 10:1.
3. Adjust CV1101 (DATA CLOCK) so that frequency becomes 728.022KHz±1Hz.

4-3. B1 BOARD ADJUSTMENTS

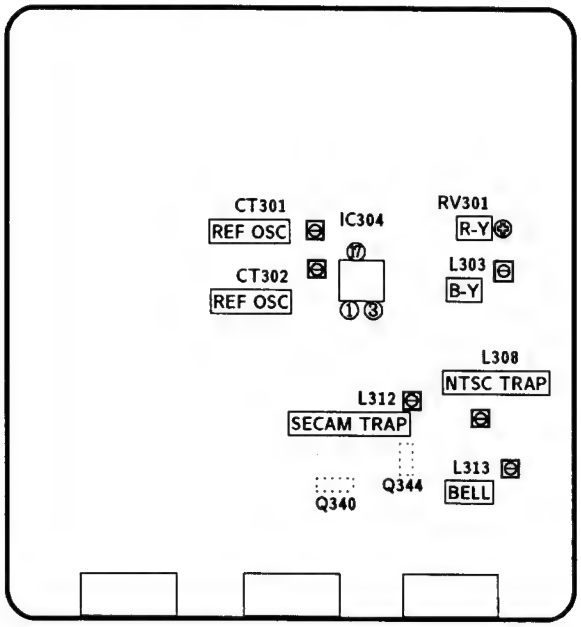

B1 BOARD (COMPONENT SIDE)

REFERENCE OSCILLATOR ADJUSTMENT (CT302 8.8MHz)

1. Input a PAL color bar signal.
2. Ground pin ⑰ of the IC304.
3. Adjust CT302 to obtain synchronization.

REFERENCE OSCILLATOR ADJUSTMENT (CT301 7.16MHz)

1. Input an NTSC color bar signal.
2. Ground pin ⑰ of IC304.
3. Adjust the CT301 to obtain synchronization.
4. Remove the jumper grounding pin ⑰ of IC304.

BELL FILTER ADJUSTMENT (L313)

1. Input a SECAM color bar signal.
2. Connect the oscilloscope to the emitter of Q344.
3. Adjust L313 so that the waveform is flat.

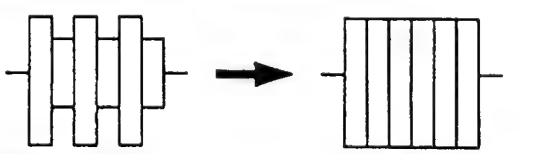

<Before Adjustment> <After Adjustment>

DISCRIMINATION ADJUSTMENTS (RV301 and L303)

1. Input a SECAM color bar signal.
2. Connect the oscilloscope to pin ① of IC304.
3. Adjust RV301 until the white and black sections of the waveform at pin ① are at the 0 level.
   Connect the oscilloscope to pin ③ of IC304.
4. Adjust L303 until the white and black sections of
5. the waveform at pin ③ are at the 0 level.

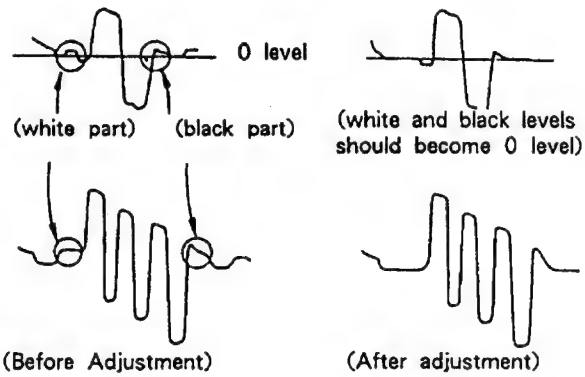

SECAM TRAP (L312)

1. Input a SECAM color bar signal.
2. Connect oscilloscope to Q340 emitter and adjust L312 to minimize color carrier on the Y-signal.

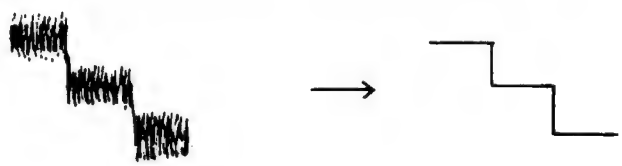

NTSC TRAP (L308)

1. Input a NTSC (3.58) color bar signal.
2. Connect oscilloscope to Q340 emitter and adjust L308 to minimize color carrier on the Y-signal.

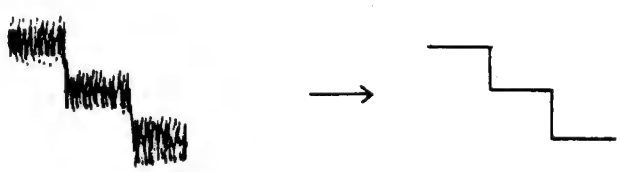

4-4. D BOARD ADJUSTMENTS

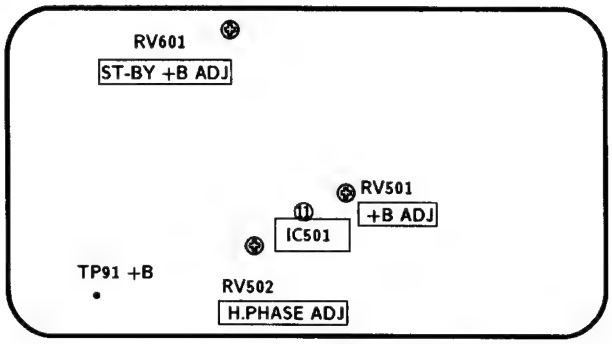

D BOARD (COMPONENT SIDE)

+B ADJUSTMENT (RV501)

1. Connect the digital multimeter to TP91.
2. Adjust RV501 to obtain 135±0.2V.

ST-BY +B ADJUSTMENT (RV601)

1. Put the system into ⏻ standby mode (remote commander).
2. Connect the digital multimeter to TP91.
3. Adjust RV601 to obtain 135±3V.
4. Take the system out of ⏻ standby mode (remote commander).

H.PHASE ADJUSTMENT (RV502)

1. Input a PAL color bar signal.
2. Set the picture and brightness controls to their normal levels.
3. Set RV1508 (H.CENT) to its mechanical center.
4. Connect the oscilloscope to pin ⑪ (SCP) of IC 501.
5. Rotate RV502 to adjust to H±0.1μs.

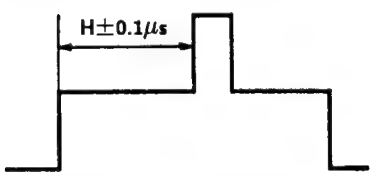

Standard of H. PHASE

Model Size	H
25″	5.1μs
29″	5.5μs

4-5. J1 BOARD ADJUSTMENTS

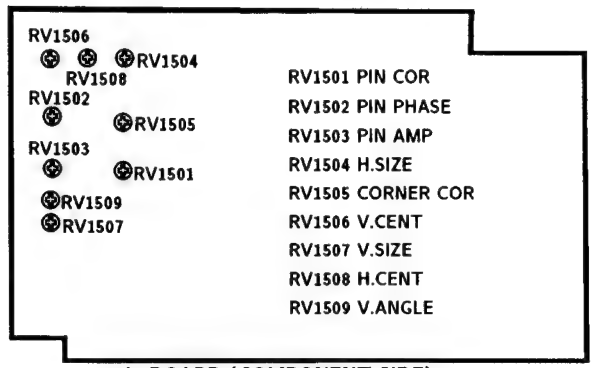

J1 BOARD (COMPONENT SIDE)

RV1508
H. CENT (HORIZONTAL CENTER)

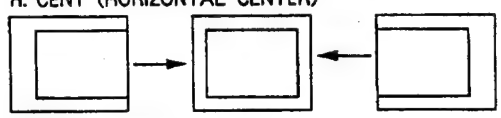

RV1504
H. SIZE (HORIZONTAL SIZE)

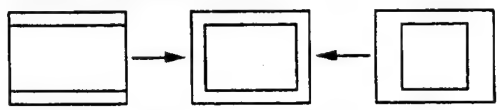

RV1506
V. CENT (VERTICAL CENTER)

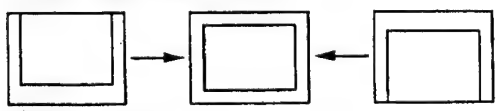

RV1507
V. SIZE (VERTICAL SIZE)

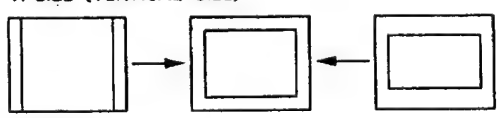

RV1509
V. ANGLE (VERTICAL ANGLE)

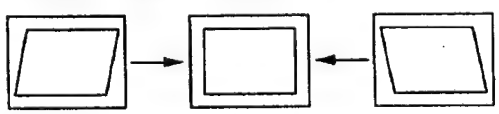

RV1503
PIN AMP (PINCUSHION AMPLIFIER)

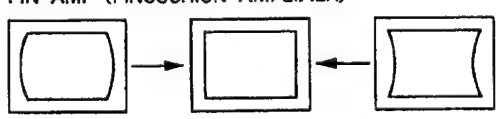

RV1502
PIN PHASE (PINCUSHION PHASE)

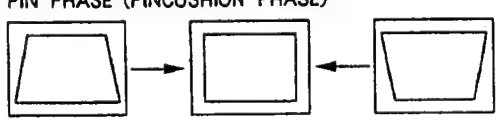

RV1501
PIN. COR (PINCUSHION CORRECT)

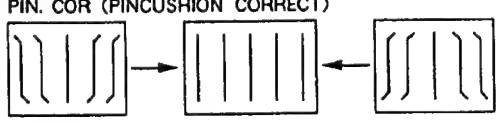

RV1505
CORNER. COR (CORNER CORRECT)

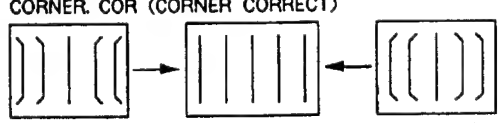

4-6. V BOARD ADJUSTMENT

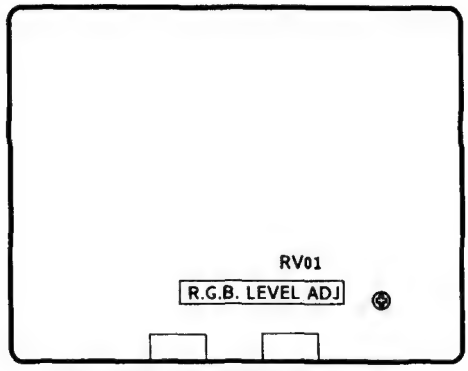

V BOARD (COMPONENT SIDE)

RGB LEVEL ADJUSTMENT (RV01)

1. Maximize the picture setting.
2. Adjust RV01 so that the RGB output is 0.75V.

4-7. SECONDARY ADJUSTMENTS

SUB BRIGHTNESS ADJUSTMENT

1. Set the system to receive a test pattern.
2. Press → • ← on the remote commander to put the system into normal mode.
3. Switch off the power.
4. While depressing the adjusting buttons + and − simultaneusly, turn on the power. (SUB mode is obtained)
5. Minimize the ◑ contrast setting.
6. Adjust the ☼ brightness control so that the gray scale 0 IRE section is cut off completely and the 20 IRE section is barely glowing.
7. Depress the ◇ (store) button of the remote commander.
   (SUB mode is released)

If there is no test color pattern

1. Set the system to receive a color pattern.
2. Press → • ← on the remote commander to put the system into normal mode.
   Set the ◑ color to its normal state.
3-5. Steps are the same as above.
6. Since 20 IRE is nearly blue, adjust the ☼ brightness control so that the blue barely glows.
7. Same as step 7 above.
8. Press → • ← on the remote commander to put the system into normal mode.

SUB COLOR ADJUSTMENT

1. Set the system to receive color bars.
2. Press → • ← on the remote commander to put the system into normal mode.
3. Cut off the power.
4. While depressing the adjustment buttons + and − simultaneusly, turn on the power. (SUB mode is obtained).
5. Adjust the color control so that the B out waveform (pin ⑤ of C board connector CNC72) is as shown in the figure below.
6. Depress the ◇ (store) button of the remote commander. (SUB mode is released)

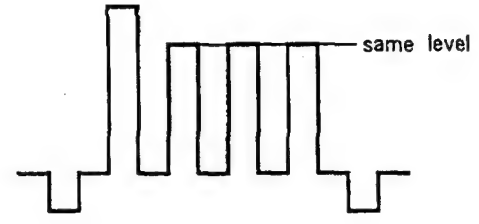

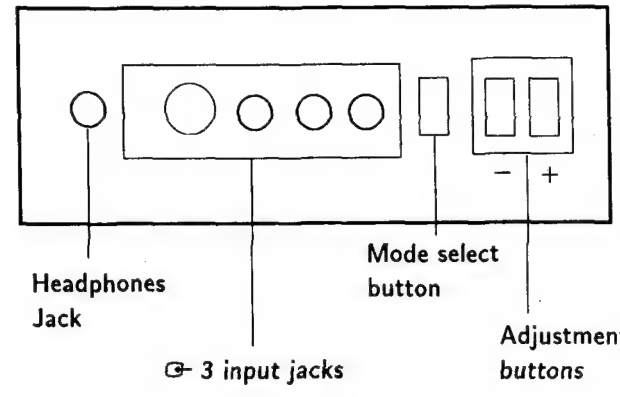

DIAGRAMS

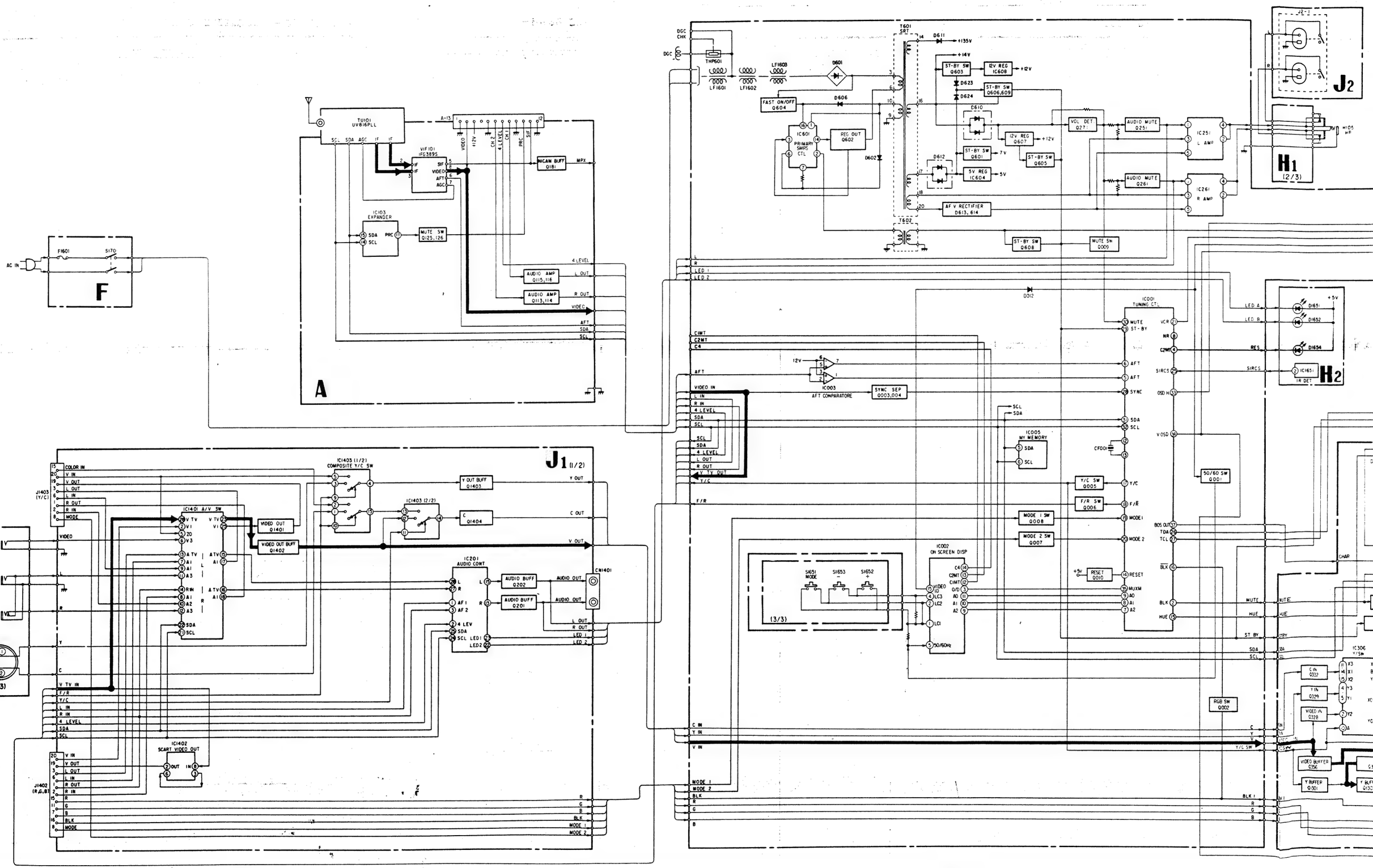
F
AC IN
F1601
S170
A
TU101 UV816PLL
VIF101 IFG3895S
IC103 EXPANDER
MUTE SW Q125,126
NICAM BUFF Q181
AUDIO AMP Q115,116
AUDIO AMP Q113,114
4 LEVEL
L OUT
R OUT
VIDEO
AFT
SDA
SCL
T601 SRT
D611
+135V
+14V
ST-BY SW Q603
12V REG IC608
+12V
ST-BY SW Q606,609
D623
D624
D610
FAST ON/OFF Q604
D606
IC601 PRIMARY SMPS CTL
REG OUT Q602
D602
D612
12V REG Q607
ST-BY SW Q601
ST-BY SW Q605
5V REG IC604
5V
VOL DET Q271
AUDIO MUTE Q251
AUDIO MUTE Q261
IC251 L AMP
IC261 R AMP
AF V RECTIFIER D613, 614
T602
ST-BY SW Q608
MUTE SW Q009
J2
H1 (2/3)
J1 (1/2)
COLOR IN
V IN
V OUT
L OUT
L IN
R OUT
R IN
MODE
J1403 (Y/C)
IC1401 A/V SW
IC1403 (1/2) COMPOSITE Y/C SW
IC1403 (2/2)
VIDEO OUT Q1401
VIDEO OUT BUFF Q1402
Y OUT BUFF Q1403
C Q1404
Y OUT
C OUT
V OUT
IC201 AUDIO CONT
AUDIO BUFF Q202
AUDIO BUFF Q201
AUDIO OUT
CN1401
L OUT
R OUT
LED 1
LED 2
H1-02
H1 (1/3)
V TV IN
F/R
Y/C
L IN
R IN
4 LEVEL
SDA
SCL
IC1402 SCART VIDEO OUT
J1402 (R,G,B)
R
G
B
BLK
MODE
C IN
Y IN
V IN
MODE 1
MODE 2
BLK
IC003 AFT COMPARATORE
SYNC SEP Q003,004
IC001 TUNING CTL
MUTE
ST-BY
AFT
SYNC
VCR
NR
C2MT
SIRCS
OSD H
VOSD
IC005 MY MEMORY
CFD01
Y/C SW Q005
F/R SW Q006
MODE 1 SW Q008
MODE 2 SW Q007
50/60 SW Q001
IC002 ON SCREEN DISP
RESET Q010
RESET
MUXM
BOS OUT
TDA
TCL
CHAR
BLK
HUE
ST BY
RGB SW Q002
VIDEO BUFFER Q356
Y BUFFER Q130
IC306 Y/C SW
C IN Q332
Y IN Q329
VIDEO IN Q328
LED A
LED B
RES
IR DET
DI651
DI652
DI654
IC1651
H2
+5V
SI651 MODE
SI653 -
SI652 +
(3/3)
50/60Hz

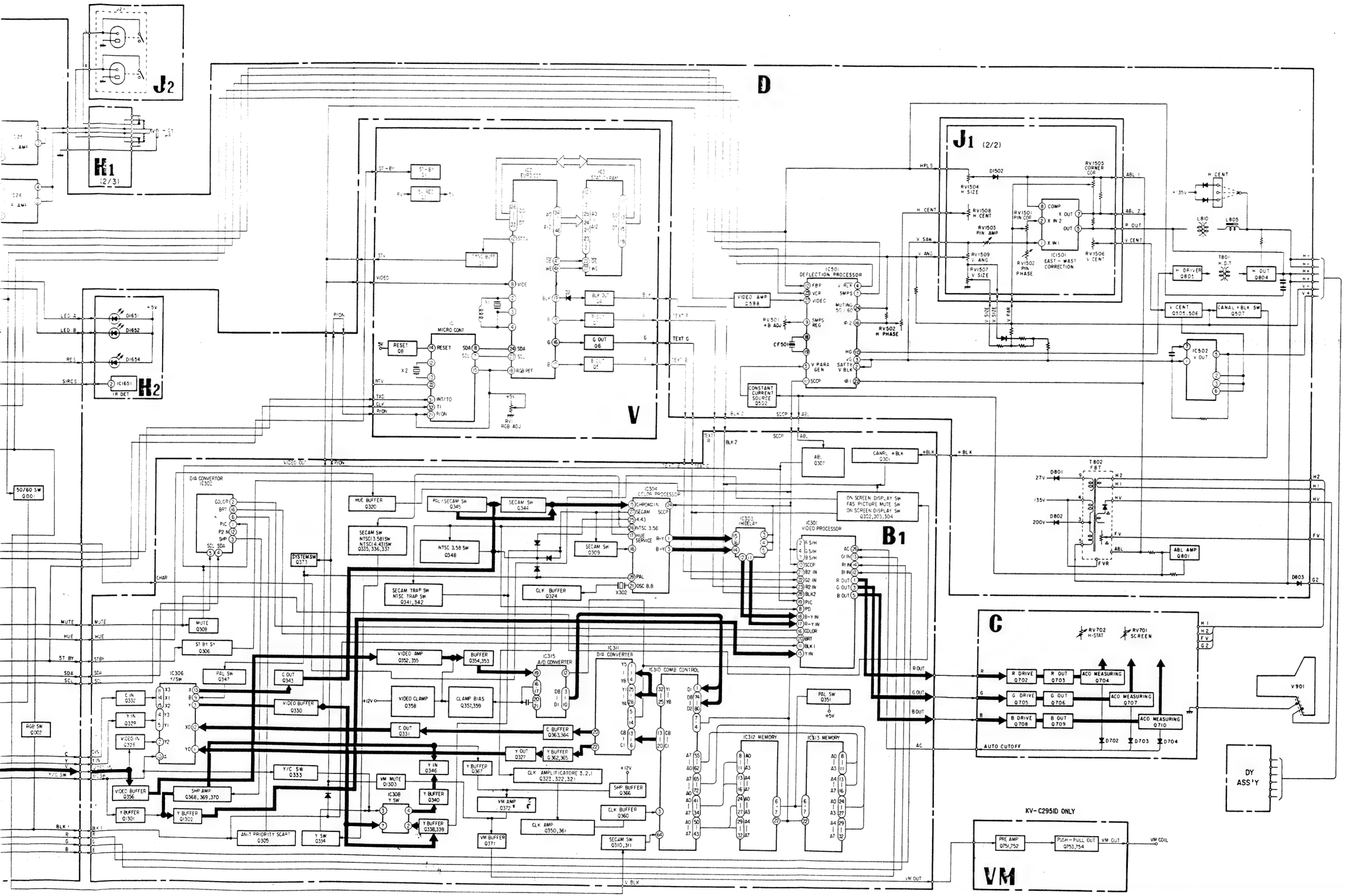
J2
H1
(2/3)
D
J1 (2/2)
V
H2
B1
C
VM
DY ASS'Y
KV-C295ID ONLY
IC501 DEFLECTION PROCESSOR
IC301 VIDEO PROCESSOR
IC304 COLOR PROCESSOR
IC311 D/A CONVERTER
IC310 COMB CONTROL
IC312 MEMORY
IC313 MEMORY
IC315 A/D CONVERTER
IC306 Y/SW
IC308 Y SW
IC302 D/A CONVERTOR
IC1501 EAST-WAST CORRECTION
IC502 V OUT
IC1651 IR DET
IC1501 EUROCOST
IC3 STATIC RAM
IC MICRO CONT
T801 H.D.T
T802 FBT
RV702 H-STAT
RV701 SCREEN
R DRIVE Q702
G DRIVE Q705
B DRIVE Q708
R OUT Q703
G OUT Q706
B OUT Q709
ACO MEASURING Q704
ACO MEASURING Q707
ACO MEASURING Q710
AUTO CUTOFF
PRE AMP Q751,752
PUSH-PULL OUT Q753,754
VM OUT
VM COIL
V901
ABL AMP Q801
CANAL +BLK SW Q507
H DRIVER Q805
H OUT Q804
V CENT Q505,506
CONSTANT CURRENT SOURCE Q502
VIDEO AMP Q598
ON SCREEN DISPLAY SW
FAS PICTURE MUTE SW
ON SCREEN DISPLAY SW
Q302,303,304
ABL Q307
CANRL +BLK Q301
HUE BUFFER Q320
PAL/SECAM SW Q345
SECAM SW Q344
SECAM SW Q309
NTSC 3.58 SW Q348
SECAM TRAP SW
NTSC TRAP SW
Q341,342
CLK BUFFER Q324
SYSTEM SW Q373
MUTE Q308
ST BY SY Q306
PAL SW Q347
C OUT Q343
VIDEO BUFFER Q330
VIDEO AMP Q352,355
BUFFER Q354,353
VIDEO CLAMP Q358
CLAMP BIAS Q357,359
C OUT Q331
C BUFFER Q363,364
Y OUT Q327
Y BUFFER Q362,365
CLK AMPLIFICATORE 3.2.1
Q323,322,321
SHP BUFFER Q366
CLK BUFFER Q360
CLK AMP Q350,361
SECAM SW Q310,311
VM AMP Q372
VM BUFFER Q371
VM MUTE Q1303
Y IN Q346
Y BUFFER Q367
Y BUFFER Q340
Y BUFFER Q338,339
Y SW Q334
Y/C SW Q333
VIDEO BUFFER Q356
SHP AMP Q368,369,370
Y BUFFER Q1301
Y BUFFER Q1302
ANIT PRIORITY SCART Q305
RGB SW Q002
50/60 SW Q001
PAL SW Q351
RV1 RGB ADJ
RV502 H PHASE
RV501 +B ADJ
CF501
RV1504 H SIZE
RV1508 H CENT
RV1503 PIN AMP
RV1509 V ANG
RV1507 V SIZE
RV1505 CORNER COR
RV1501 PIN COR
RV1502 PIN PHASE
RV1506 V CENT
RV1502 PIN PHASE
D1502
D1651
D1652
D1654
L810
L805
D801
D802
D803
D702
D703
D704
+5V
+12V
+135V
VIDEO OUT
P/ON
CHAR
MUTE
HUE
ST BY
SDA
SCL
Y/C SW
BLK 1
BLK 2
R OUT
G OUT
B OUT
AC
V BLK
VM OUT

5-2. CIRCUIT BOARDS LOCATION

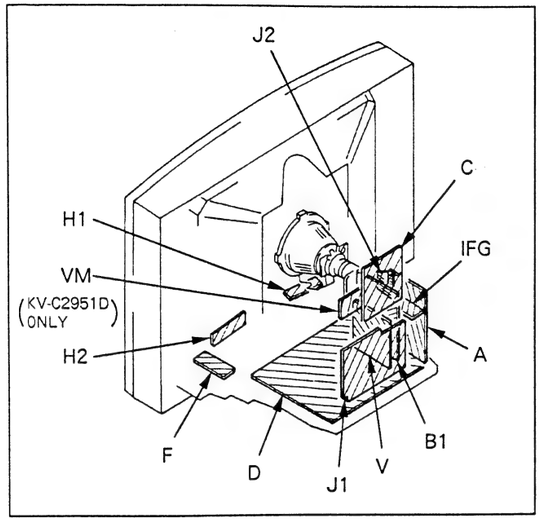

5-3. SCHEMATIC DIAGRAM AND PRINTED WIRING BOARDS

Note: The components identified by shading and mark ⚠ are critical for safety. Replace only with part number specified.

Note :

- All capacitors are in μF unless otherwise noted. pF : μμF 50WV or less are not indicated except for electrolytics.
- Indication of resistance, which does not have one for rating electrical power, is as follows.

Pitch : 5mm Rating electrical power : 1/4W

- Chip resistor is in 1/10W.
- All resistors are in ohms. kΩ = 1000Ω, MΩ = 1000k Ω
- : nonflammable resistor.
- : fusible resistor.
- Δ : internal component.
- : panel designation and adjustment for repair.
- All variable and adjustable resistors have characteristic curve B.unless otherwise noted.
- All voltages are in V.
- Readings are taken with a 10MΩ digital multimeter.
- Readings are taken with a color-bar signal input.
- Voltage variations may be noted due to normal production tolerances.
- : B + line.
- : signal path. (RF)

Reference information

RESISTOR	: RN	METAL FILM
	: RC	SOLID
	: FPRD	NONFLAMMABLE CARBON
	: FUSE	NONFLAMMABLE FUSIBLE
	: RS	NONFLAMMABLE METAL OXIDE
	: RB	NONFLAMMABLE CEMENT
	: RW	NONFLAMMABLE WIREWOUND
	: ✱	ADJUSTMENT RESISTOR
COIL	: LF-8L	MICRO INDUCTOR
CAPACITOR	: TA	TANTALUM
	: PS	STYROL
	: PP	POLYPROPYLENE
	: PT	MYLAR
	: MPS	METALIZED POLYESTER
	: MPP	METALIZED POLYPROPYLENE
	: ALB	BIPOLAR
	: ALT	HIGH TEMPERATURE
	: ALR	HIGH RIPPLE

A [TUNER, SIF, VIF] **F** [AC IN, POWER SW] **J1** [AUDIO CONTROL, AV INPUT, Y/C INPUT, SCART VIDEO OUT, EAST-WEST CORRECTION] **J2** [SPEAK TERM

—A Board—

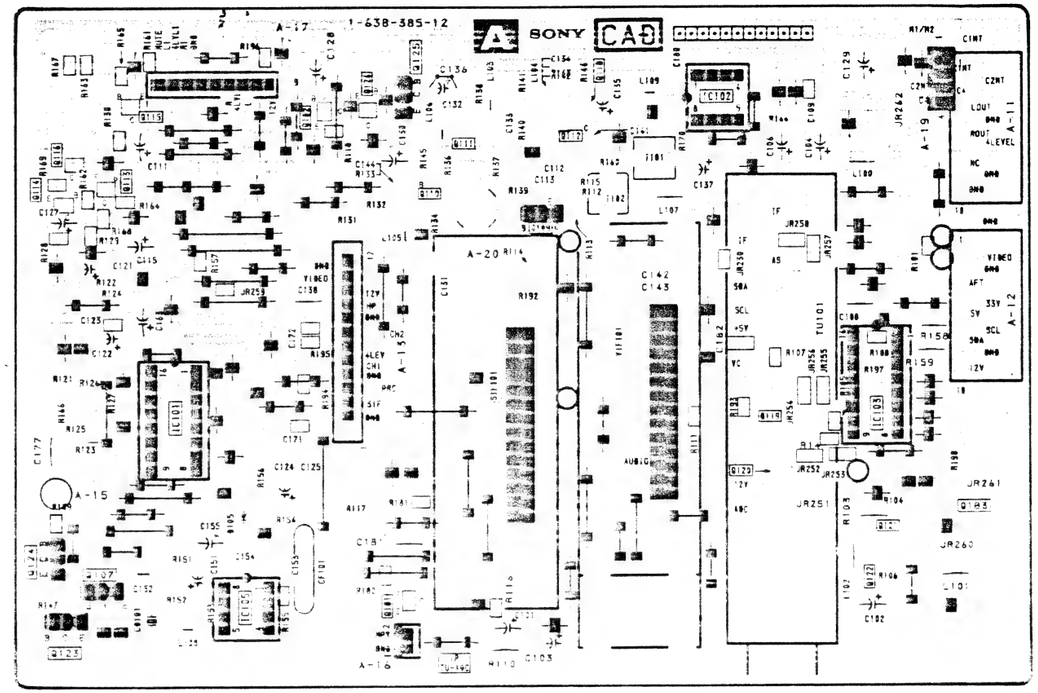

—F Board—

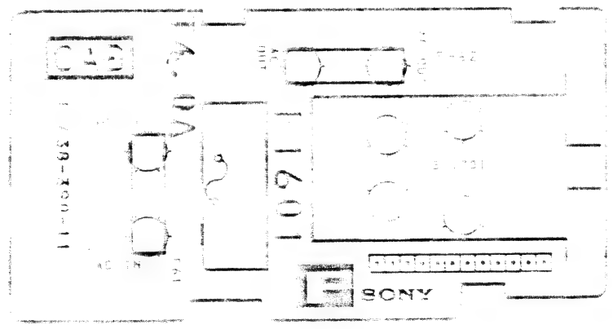

T,
OUT,] **J2** [SPEAKER TERMINAL] **VM** [VM AMP] **H1** [CONTROL SW, AV INPUT, HEADPHONE] **H2** [SIRCS RECEIVER, INDICATOR]

–J1 Board–

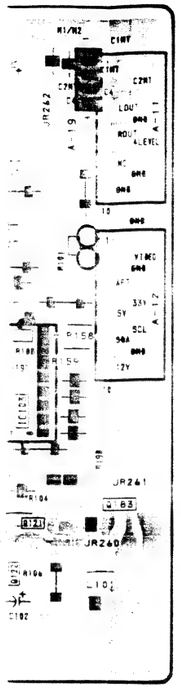

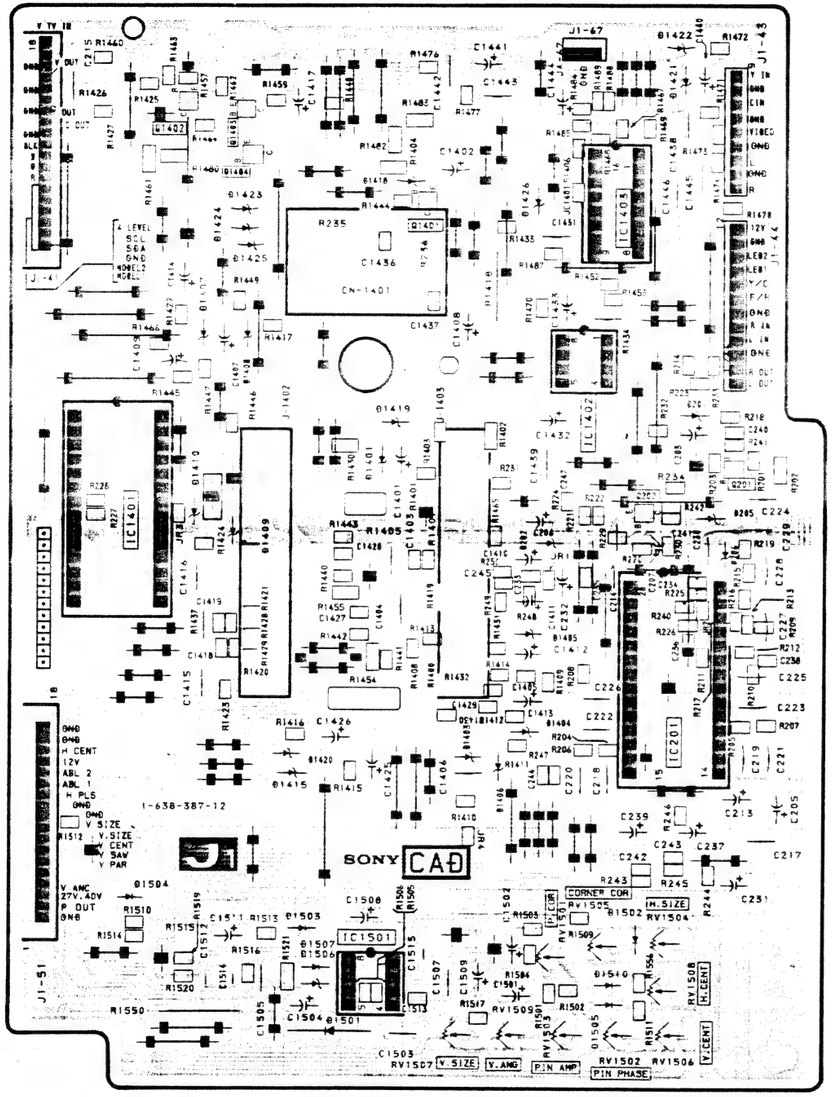

–J2 Board–

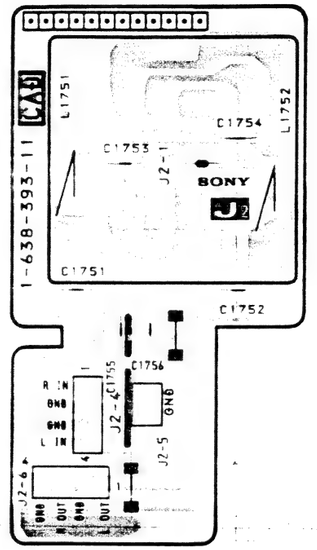

–VM BOARD– (KV-C2951D ONLY)

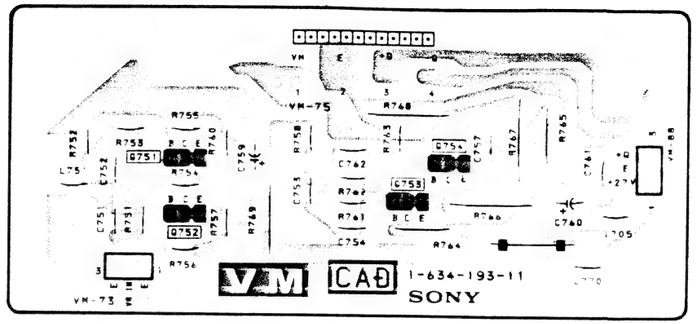

–H1 Board–

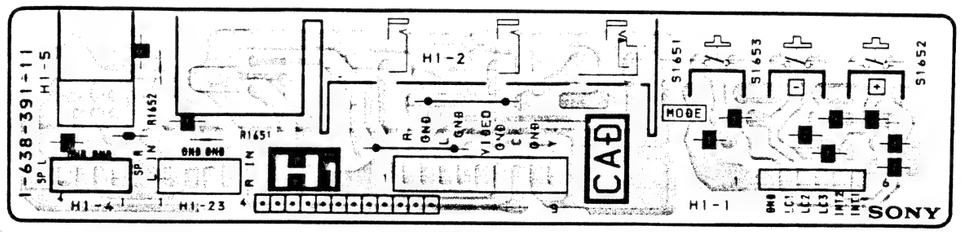

–H2 Board–

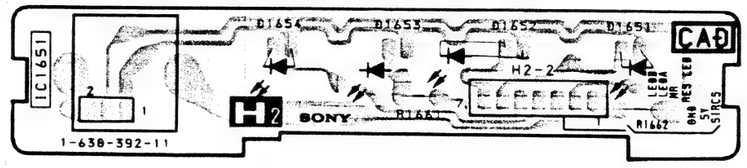

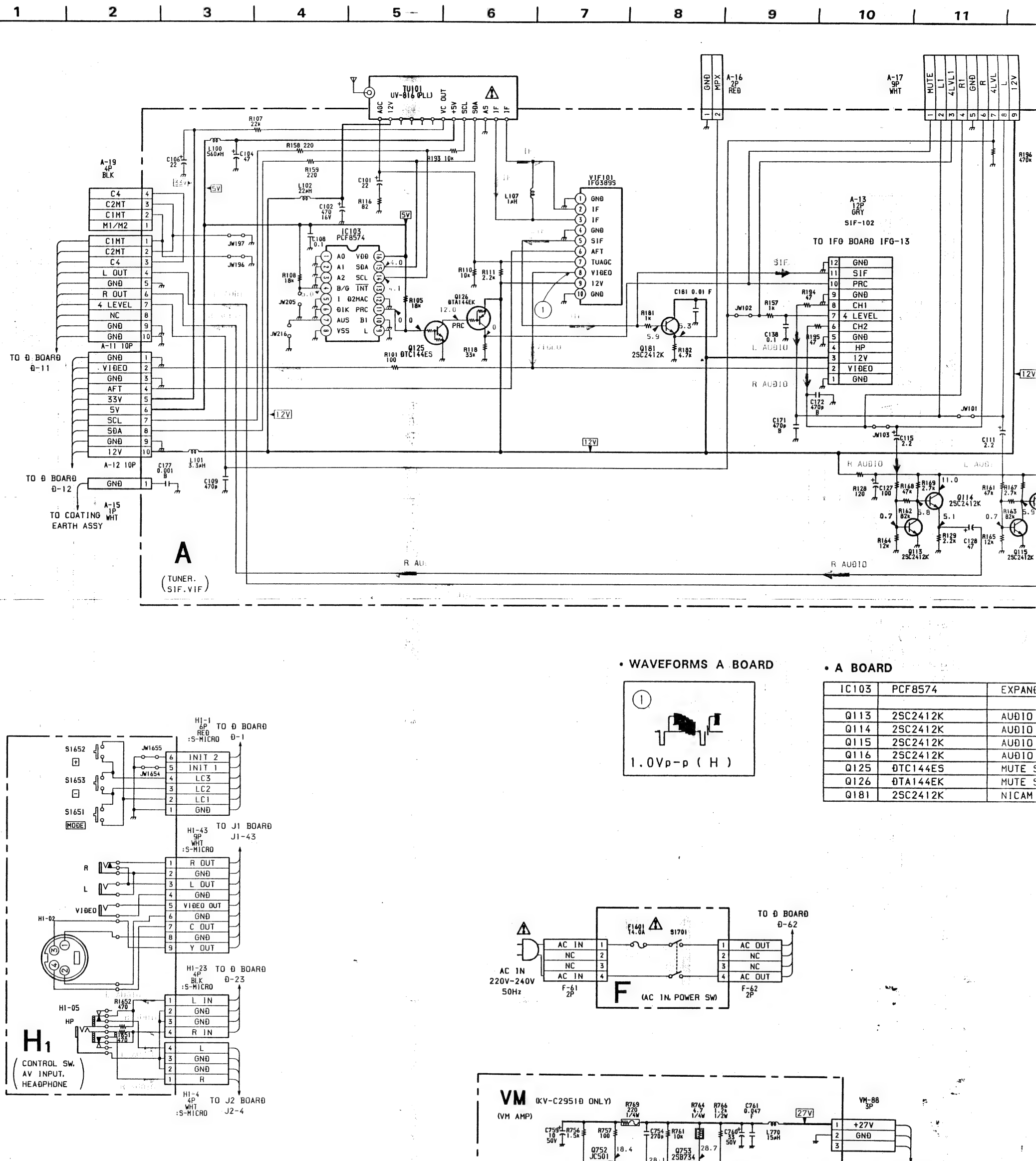

• WAVEFORMS A BOARD

• A BOARD

IC103	PCF8574	EXPANÐ
Q113	2SC2412K	AUÐIO
Q114	2SC2412K	AUÐIO
Q115	2SC2412K	AUÐIO
Q116	2SC2412K	AUÐIO
Q125	ÐTC144ES	MUTE S
Q126	ÐTA144EK	MUTE S
Q181	2SC2412K	NICAM

• H2 BOARD

IC1651	SBX1610-11	INFRARED RECIVER
Ð1651	LÐ-201VR	AUÐIO CHANNEL A INÐICATOR
Ð1652	LÐ-201VR	AUÐIO CHANNEL B INÐICATOR
Ð1654	LÐ-201VR	RESET

• VM BOARD (KV-C2951D ONLY)

Q751	JC501	REF AMP
Q752	JC501	REF AMP
Q753	2SB734	PUSH-PULL OUT
Q754	2SÐ774	PUSH-PULL OUT

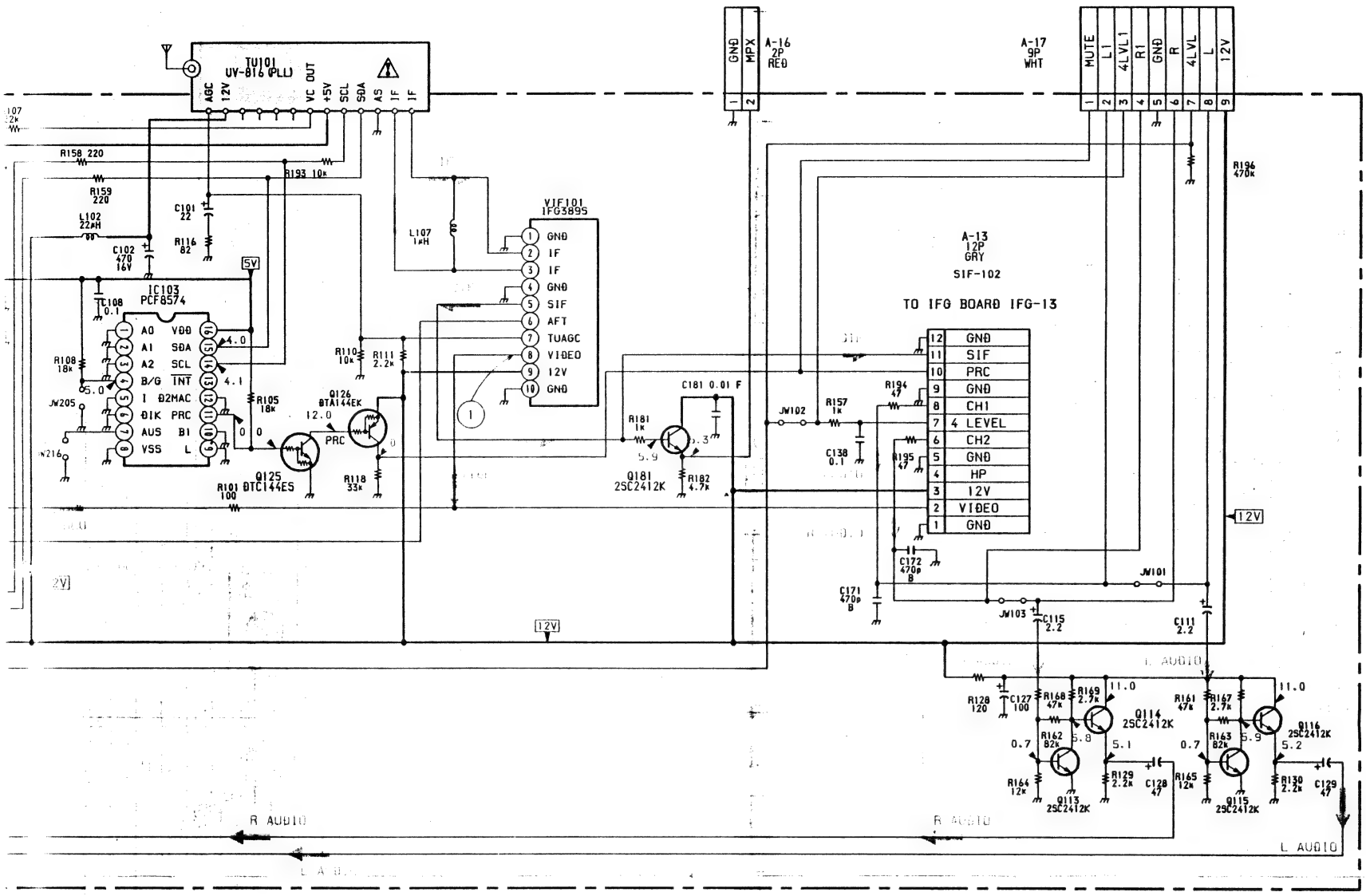

• WAVEFORMS A BOARD

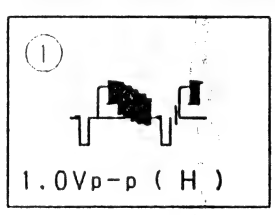

• A BOARD

IC103	PCF8574	EXPANDER
Q113	2SC2412K	AUDIO AMP
Q114	2SC2412K	AUDIO AMP
Q115	2SC2412K	AUDIO AMP
Q116	2SC2412K	AUDIO AMP
Q125	DTC144ES	MUTE SW
Q126	DTA144EK	MUTE SW
Q181	2SC2412K	NICAM BUFFER

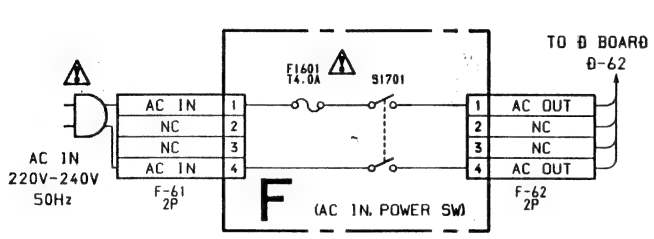

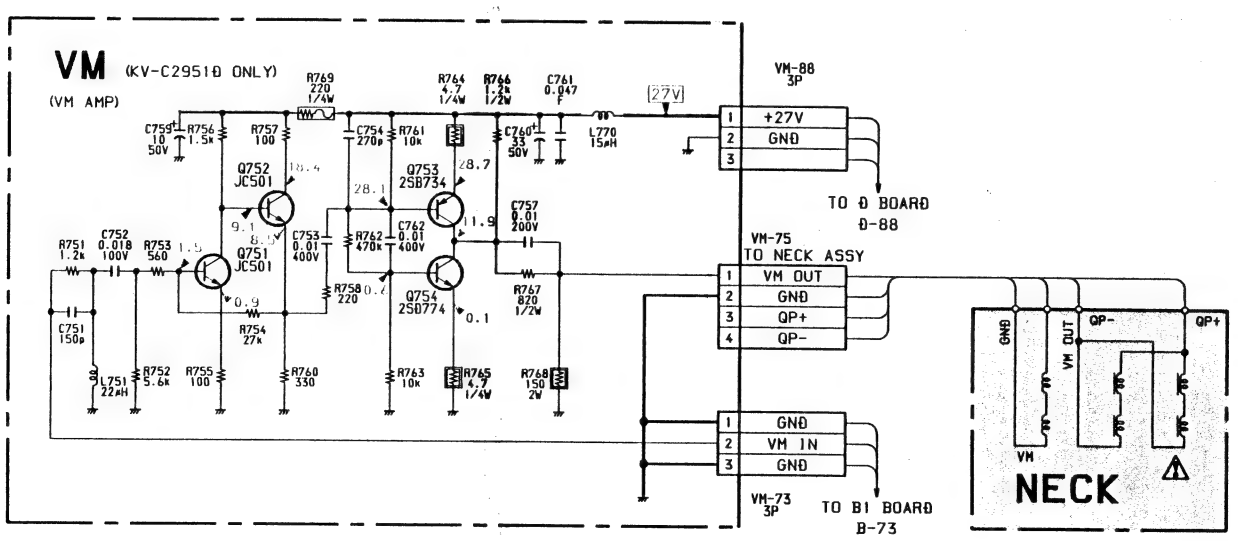

• VM BOARD (KV-C2951D ONLY)

Q751	JC501	REF AMP
Q752	JC501	REF AMP
Q753	2SB734	PUSH-PULL OUT
Q754	2SD774	PUSH-PULL OUT

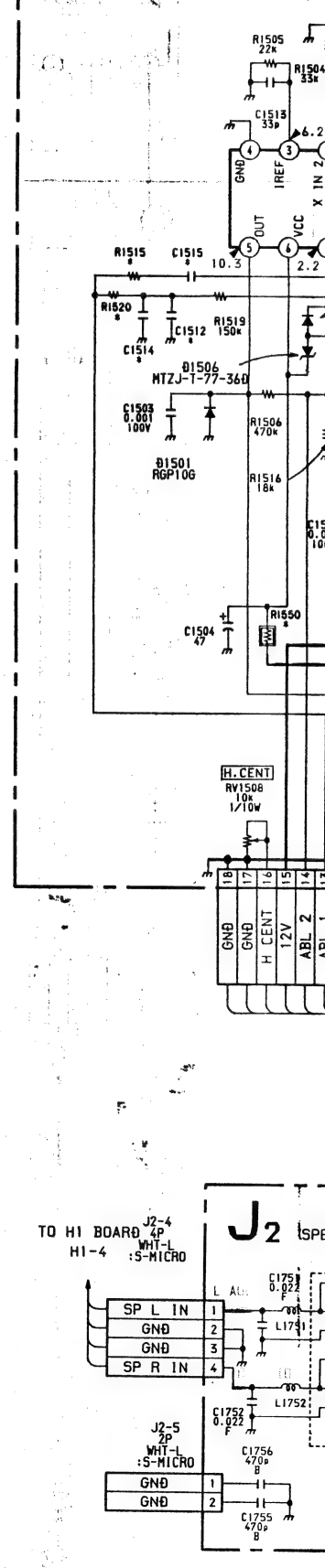

J1

AUDIO CONTROL,
AV INPUT, Y/C INPUT,
SCART VIDEO OUT,
EAST-WEST CORRECTION

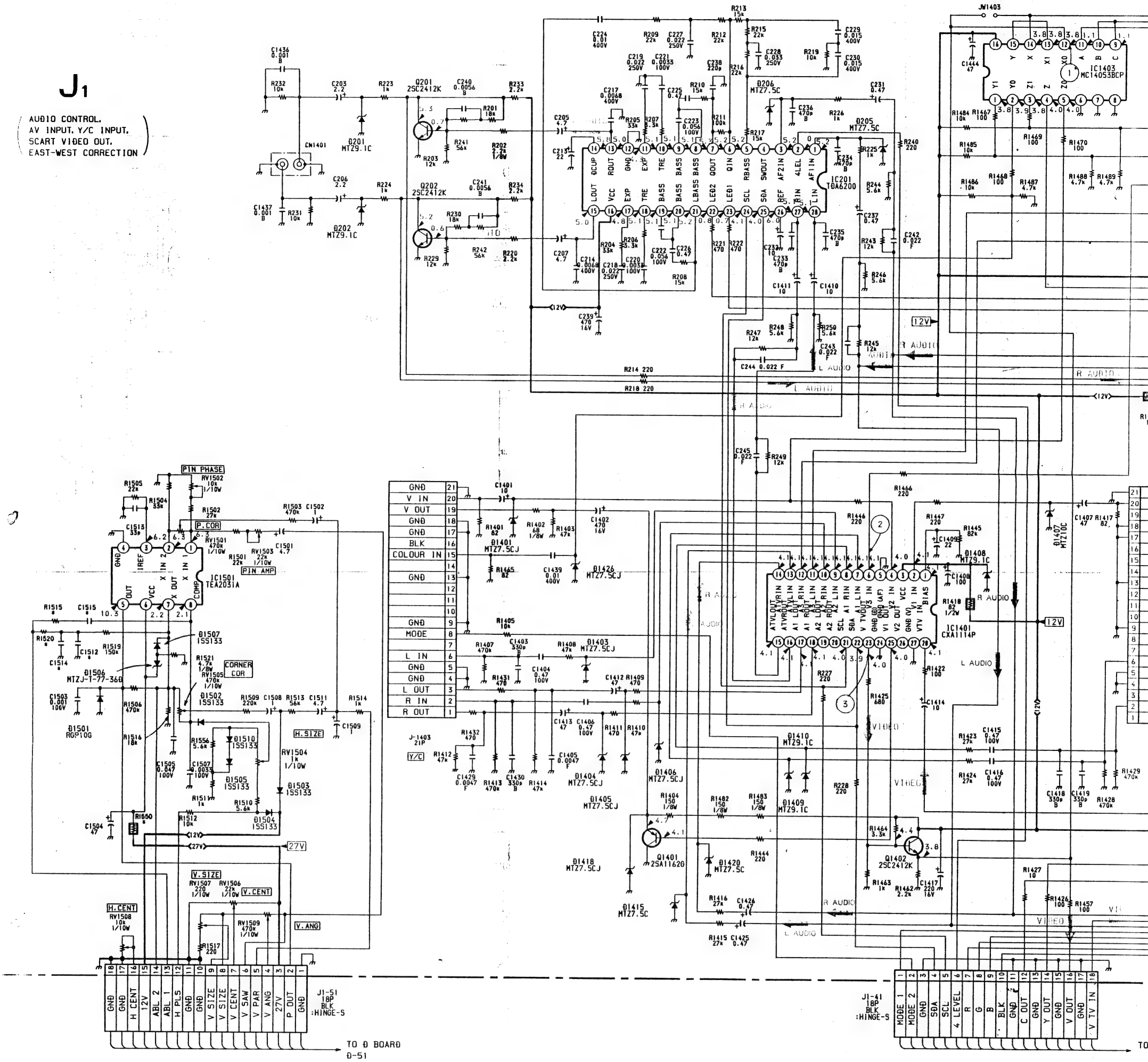

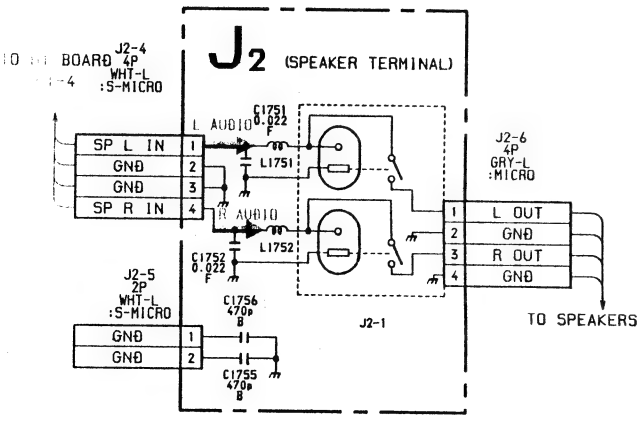

A BOARD IC103 PCF8574

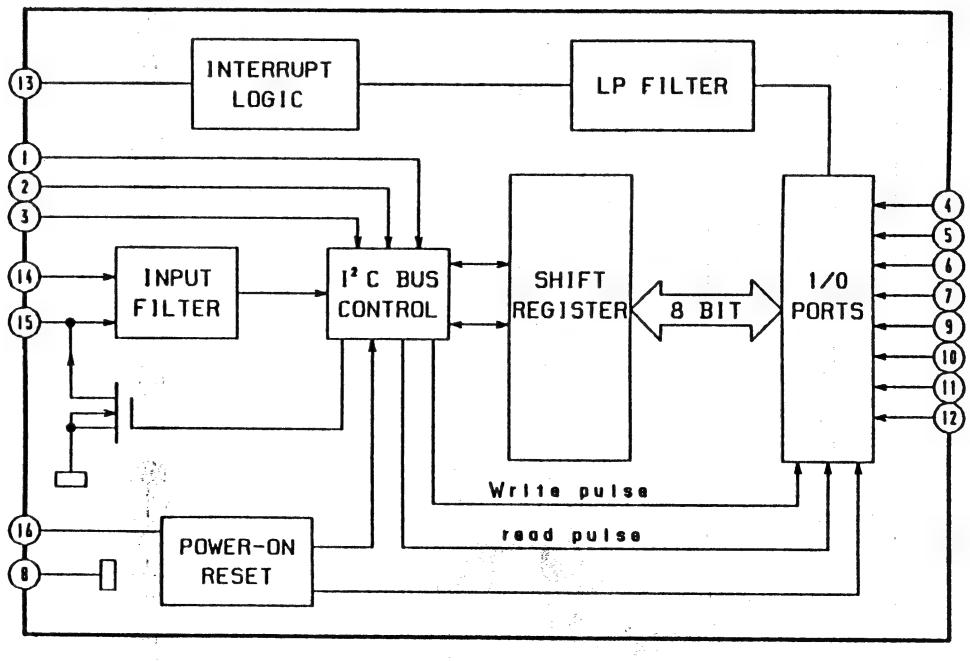

H2 BOARD IC1651 SBX161

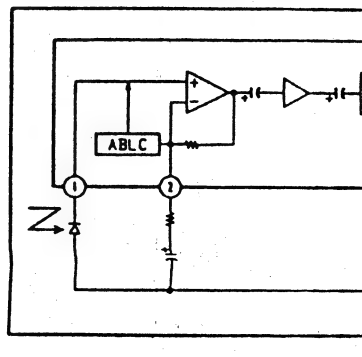

• J1 B
* MAR

KV-C
C1512
C1514
C1515
R1515
R1520
R1550

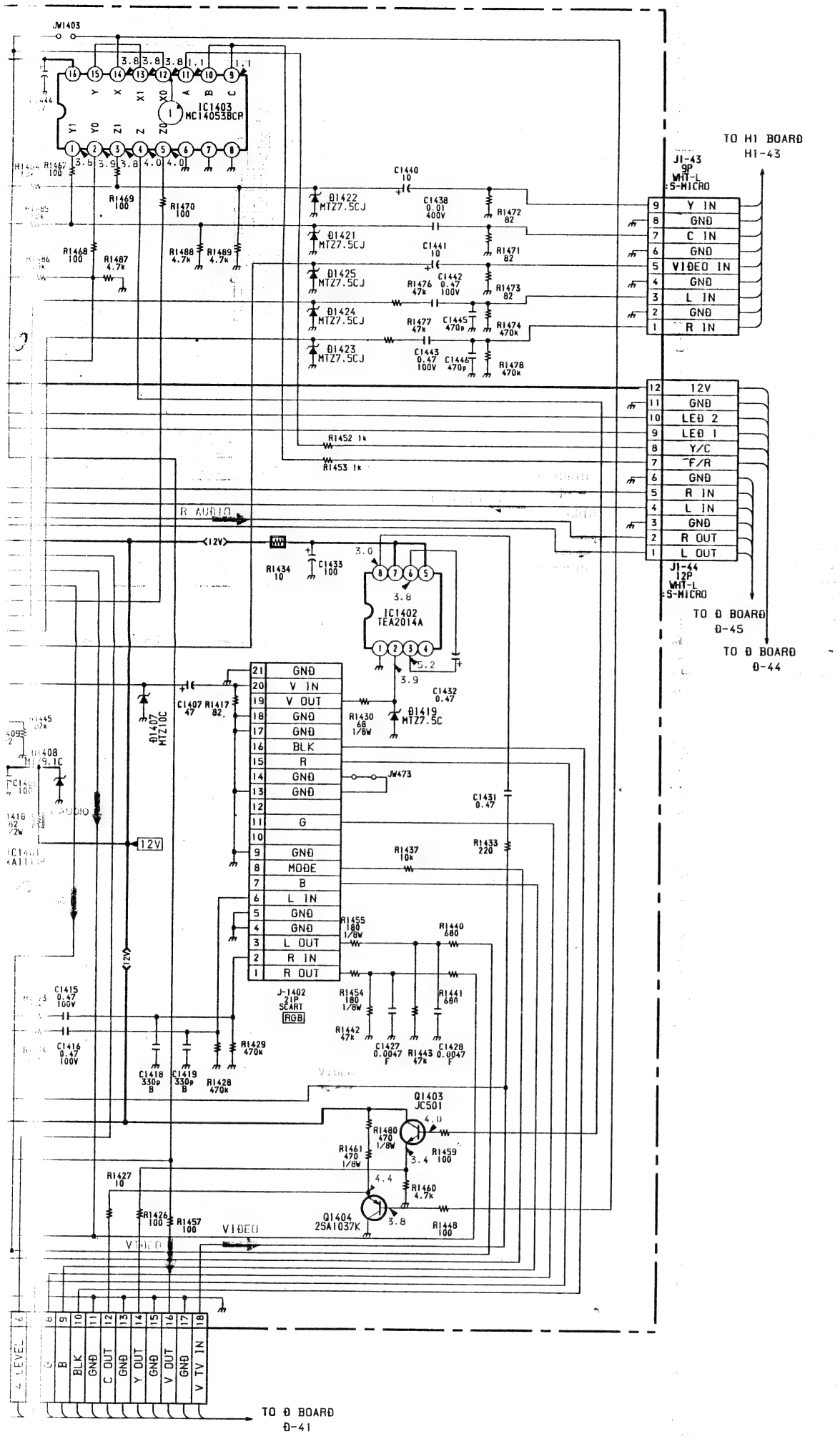

• J1 BOARD

IC201	TDA6200	AUDIO CONTROL
IC1401	CXA1114P	AV SW
IC1402	TEA2014A	SCART VIDEO OUT
IC1403	MC14053BCP	COMPOSITE Y/C SW
IC1501	TEA2031A	EAST-WEST CORRECTION
Q201	2SC2412K	AUDIO R BUFF
Q202	2SC2412K	AUDIO L BUFF
Q1401	2SA1037K	VIDEO OUT
Q1402	2SC2412K	VIDEO OUT BUFF
Q1403	2SC2412K	Y OUT BUFF
Q1404	2SA1037K	C OUT BUFF
D201	MTZJ-T-77-9.1C	PROTECT
D202	MTZJ-T-77-9.1C	PROTECT
D205	MTZJ-T-77-7.5C	PROTECT
D206	MTZJ-T-77-7.5C	PROTECT
D1401	MTZJ-T-77-7.5C	PROTECT
D1403	MTZJ-T-77-7.5C	PROTECT
D1404	MTZJ-T-77-7.5C	PROTECT
D1405	MTZJ-T-77-7.5C	PROTECT
D1406	MTZJ-T-77-7.5C	PROTECT
D1407	MTZJ-T-77-10C	PROTECT
D1408	MTZJ-T-77-9.1C	REG
D1409	MTZJ-T-77-9.1C	PROTECT
D1410	MTZJ-T-77-9.1C	PROTECT
D1415	MTZJ-T-77-7.5C	PROTECT
D1418	MTZJ-T-77-7.5C	PROTECT
D1419	MTZJ-T-77-7.5C	PROTECT
D1420	MTZJ-T-77-7.5C	PROTECT
D1421	MTZJ-T-77-7.5C	PROTECT
D1422	MTZJ-T-77-7.5C	PROTECT
D1423	MTZJ-T-77-7.5C	PROTECT
D1424	MTZJ-T-77-7.5C	PROTECT
D1425	MTZJ-T-77-7.5C	PROTECT
D1426	MTZJ-T-77-7.5C	PROTECT
D1501	RGP10G	PROTECT
D1502	1SS133	DECOUPLING H SIZE
D1503	1SS133	CLIPPING V PARABORA
D1504	1SS133	CLIPPING H PULSE
D1505	1SS133	REG
D1506	MTZJ-T-77-36D	PROTECT
D1507	1SS133	PROTECT
D1510	1SS133	REG

• WAVEFORMS J1 BOARD

①	②	③
1.0Vp-p (H)	1.0Vp-p (H)	2.0Vp-p (H)

J1 BOARD IC1401 CXA1114P

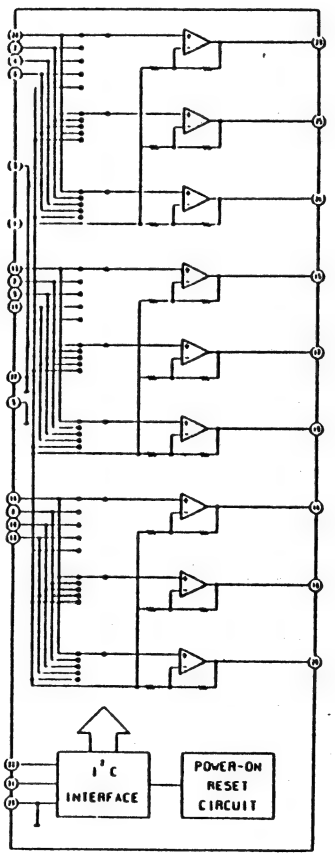

J1 BOARD IC1402 TEA2014A

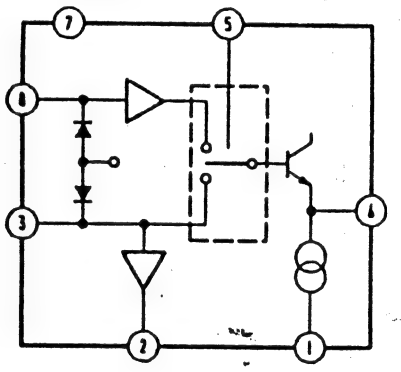

J1 BOARD IC1403 MC14053BCP

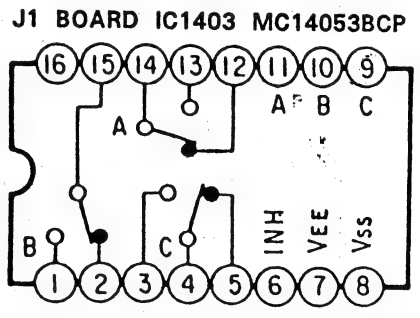

J1 BOARD IC1501 TEA2031A

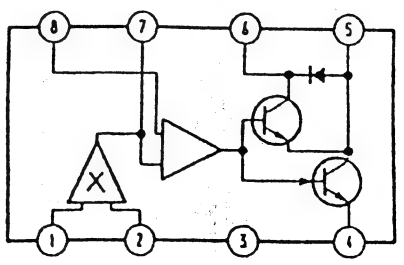

• J1 BOARD

* MARK

KV-C2551D	KV-C2951D
C1512 0.0068 400V	C1512 ———
C1514 0.022 250V	C1514 ———
C1515 820P	C1515 ———
R1515 680K	R1515 ———
R1520 470K	R1520 390K
R1550 JW	R1550 1 1W :RS

——— NOT MOUNTED

H2 BOARD IC1651 SBX1610-11

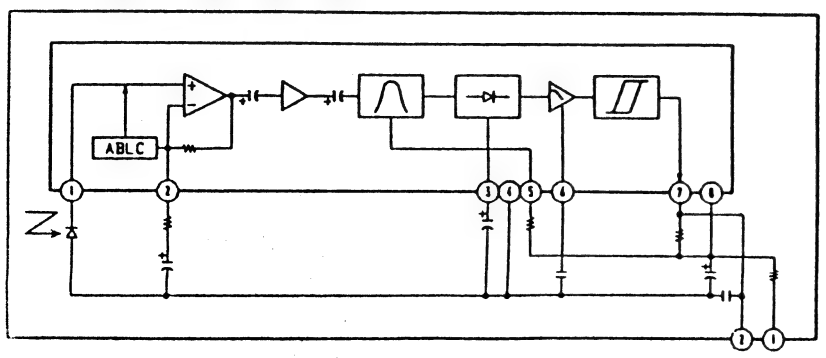

J1 BOARD IC201 TDA6200

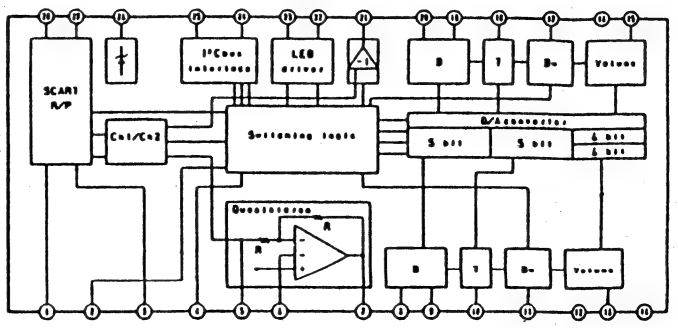

• WAVEFORMS B1 BOARD

① PAL 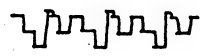 5.4Vp-p (H)	① SECAM 4.8Vp-p (H)	① NTSC3.58/ NTSC4.43 5.6Vp-p (H)	② PAL 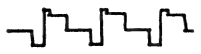 5.4Vp-p (H)
② SECAM 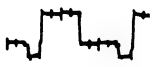 4.8 Vp-p (H)	② NTSC3.58/ NTSC4.43 5.6Vp-p (H)	③ PAL 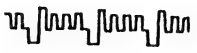 5.4Vp-p (H)	③ SECAM 5.0Vp-p (H)
③ NTSC3.58/ NTSC4.43 6.2Vp-p (H)	④ 10.5Vp-p (H)	⑤ PAL 0.4Vp-p (H)	⑤ SECAM 0.3Vp-p (H)
⑤ NTSC3.58/ NTSC4.43 0.6Vp-p (H)	⑥ PAL/SECAM 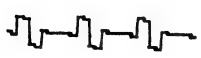 1.1Vp-p (H)	⑥ NTSC3.58/ NTSC4.43 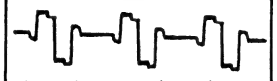 1.2Vp-p (H)	⑦ PAL/SECAM 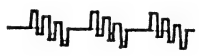 1.4Vp-p (H)
⑦ NTSC3.58/ NTSC4.43 1.4Vp-p (H)	⑧ PAL 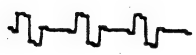 0.4Vp-p (H)	⑧ SECAM 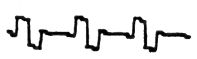 1.0Vp-p (H)	⑧ NTSC3.58/ NTSC4.43 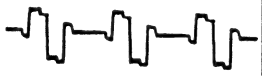 0.8Vp-p (H)
⑨ PAL 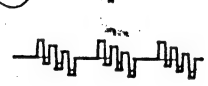 0.7Vp-p (H)	⑨ SECAM 1.4Vp-p (H)	⑨ NTSC3.58/ NTSC4.43 0.85Vp-p (H)	⑩ SECAM 0.2Vp-p (H)
⑪ SECAM 1.2Vp-p (H)	⑫ PAL 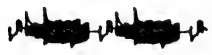 0.16Vp-p (H)	⑫ SECAM 0.2Vp-p (H)	⑫ NTSC3.58/ NTSC4.43 0.3Vp-p (H)
⑬ PAL 1.0Vp-p (H)	⑬ SECAM 0.8Vp-p (H)	⑬ NTSC3.58 0.9Vp-p (H)	⑬ NTSC4.43 0.95Vp-p (H)
⑭ PAL 0.8Vp-p (H)	⑭ SECAM 0.7Vp-p (H)	⑭ NTSC3.58 0.6Vp-p (H)	⑭ NTSC4.43 0.8Vp-p (H)
⑮ PAL 0.7Vp-p (H)	⑮ SECAM NTSC3.58 NTSC4.43 0.5Vp-p (H)	⑯ 0.9Vp-p (H)	⑰ PAL 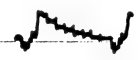 1.9Vp-p (H)
⑰ SECAM NTSC3.58 NTSC4.43 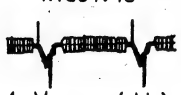 0.1 Vp-p (H)	⑱ PAL 0.2Vp-p (H)	⑱ SECAM 0.8Vp-p (H)	⑲ PAL 0.6Vp-p (H)
⑲ SECAM 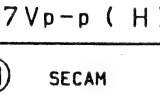 0.8Vp-p (H)	⑲ NTSC3.58/ NTSC4.43 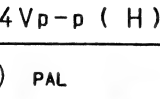 0.9Vp-p (H)		

s to the voltage volue shown by the ark ※ on the Schematic Diagram, see e another list.

IC·NO	PIN·NO	PAL	SECAM	NTSC 3.58	NTSC 4.43
301	(5)	6.7	4.8	4.8	4.8
	(15)	8.9	7.0	7.0	7.0
	(19)	3.4	3.4	3.8	3.4
	(24)	6.6	6.6	6.0	6.3
IC304	(1)	0.1	6.8	6.9	6.8
	(3)	9.9	0	9.9	9.9
	(7)	4.6	0	4.6	4.6
	(8)	3.4	3.0	3.4	3.4
	(9)	3.4	3.0	3.4	3.4
	(10)	4.6	3.4	4.6	4.6
	(11)	2.3	3.1	3.1	2.3
	(12)	5.6	5.6	5.6	7.4
	(13)	7.5	7.5	5.7	5.7
	(25)	0.1	0.1	0.1	6.0
	(26)	0.1	0.1	6.0	0.1
	(27)	0.1	6.0	0.1	0.1
	(28)	6.0	0.1	0.1	0.1

Q·NO		PAL	SECAM	NTSC 3.58	NTSC 4.43
Q338	B	2.4	3.9	3.9	3.9
	E	3.0	4.6	4.6	4.6
Q339	B	3.0	4.6	4.6	4.6
	E	2.4	3.9	3.9	3.9
Q341	B	0	0.6	0.4	0.1
	C	11.6	0	11.6	11.6
Q342	B	0	0	0.4	0
	C	11.7	0	11.7	11.7
Q343	B	3.4	5.4	5.3	5.3
	E	2.8	4.7	4.7	4.7
Q344	B	0	5.4	1.0	0.1
	E	4.4	4.8	1.5	4.5
Q345	B	5.0	0.1	1.9	5.0
	E	4.4	4.4	1.4	4.4
Q347	B	0.6	0	0	0
	C	0.1	11.9	11.9	11.9
Q348	B	0.1	0.1	1.0	0.1
	C	1.3	0.2	0.2	0.4

• B1 BOARD

IC301	TDA4580-V6	VIDEO PROCESSIOR
IC302	TDA8442-N3	D/A CONVERTER
IC303	TDA4660T	1H DELAY
IC304	TDA4650WP	COLOR PROCESSOR
IC305	μPC24M05HF	REGULATOR
IC306	HCF4052BM	Y/C SW
IC308	CX20061	Y INTERRUPT
IC310	CXD2011Q	COMB CONTROL
IC311	MB40968PF	D/A CONVERTER
IC312	CXK1202Q	MEMORY
IC313	CXK1202Q	MEMORY
IC315	CXD1175AM	A/D CONVERTER
Q301	2SC2412K	CANAL +BLK
Q302	2SC2412K	ON SCREEN DISPLAY SW
Q303	2SC2412K	FAS PICTURE MUTE SW
Q304	2SC2412K	ON SCREEN DISPLAY SW
Q305	DTA144EK	ANIT PRIORITY SCART
Q306	2SC2412K	STBY SW
Q307	2SC2412K	ABL
Q308	DTC124EK	MUTE
Q310	DTC124EK	SECAM SW
Q311	DTC124EK	SECAM SW
Q320	2SC2412K	HUE BUFFER
Q321	2SA1037K	CLK AMP3
Q322	2SA1037K	CLK AMP2
Q323	2SC2412K	CLK AMP1
Q324	2SC2412K	CLK BUFFER
Q327	2SA1037K	Y OUT
Q328	2SA1037K	VIDEO IN
Q329	2SA1037K	Y IN
Q330	2SC2412K	VIDEO BUFFER
Q331	2SA1037K	C OUT
Q332	2SA1037K	C IN
Q333	DTC124EK	Y/C SW
Q334	DTC124EK	Y SW
Q335	2SC2412K	SECAM SW
Q336	2SC2412K	NTSC (3.58) SW
Q337	2SC2412K	NTSC (4.43) SW
Q338	2SA1037K	Y BUFFER
Q339	2SC2412K	Y BUFFER
Q340	2SC2412K	Y BUFFER
Q341	2SC2412K	SECAM TRAP SW
Q342	2SC2412K	NTSC TRAP SW
Q343	2SC2412K	C OUT
Q344	2SC2412K	SECAM SW
Q345	2SC2412K	PAL/SECAM SW
Q346	2SC2412K	Y IN
Q347	2SC2412K	PAL SW
Q348	DTC124EK	NTSC (3.58) SW
Q350	2SC2412K	CLK AMP
Q352	2SA1037K	VIDEO AMP
Q353	2SC2412K	BUFFER
Q354	2SC2412K	BUFFER
Q355	2SC2412K	VIDEO AMP
Q356	2SA1037K	VIDEO BUFFER
Q357	2SA1037K	CLAMP BIAS
Q358	2SC2412K	VIDEO CLAMP
Q359	2SA1037K	CLAMP BIAS
Q360	2SC2412K	CLK BUFFER
Q361	2SC2412K	CLK AMP
Q362	2SC2412K	Y BUFFER
Q363	2SC2412K	C BUFFER
Q364	2SA1037K	C BUFFER
Q365	2SA1037K	Y BUFFER
Q366	2SC2412K	SHP BUFFER
Q367	2SC2412K	Y BUFFER
Q368	2SC2412K	SHP AMP
Q369	2SC2412K	SHP AMP
Q370	2SC2412K	SHP AMP
Q371	2SC2412K	VM BUFFER
Q372	2SC2412K	VM AMP
Q373	DTC124EK	SYSTEM SW
Q1301	DTC124EK	Y BUFFER
Q1302	2SC2412K	Y BUFFER
Q1303	DTC124EK	VM MUTE
D301	IMN10	ACO AT STBY
D304	DAN212K	PROTECT
D305	DAN212K	PROTECT
D307	MA3110M	PROTECT
D308	DAN212K	PROTECT
D309	DAN212K	PROTECT
D310	MA3110M	PROTECT
D311	MA3110M	PROTECT
D312	MA3110M	PROTECT
D314	DA204K	PROTECT
D318	DA204K	PROTECT
D319	DA204K	PROTECT
D320	DA204K	PROTECT
D321	MA3056	REG
D322	DAN202K	PROTECT
D330	DAN212K	BIAS
D331	DAP202K	Y/C SW
D333	IMN10	SYSTEM SW
D336	DAN202K	CORRECT SW
D340	DA204K	VIDEO AMP
D341	DAN212K	VIDEO AMP

• B1 BOARD

* MARK

KV-C2551D	KV-C2951D
R343 560 1/10W	R343 2.2k 1/10W
R1308 0 1/10W	R1308 4.7K 1/10W
B-73 OPEN	B-73 3P

DEO PROCESSIOR
A CONVERTER
DELAY
LOR PROCESSOR
GULATOR
C SW
INTERRUPT
MB CONTROL
A CONVERTER
MORY
MORY
D CONVERTER

NAL +BLK
SCREEN DISPLAY SW
S PICTURE MUTE SW
SCREEN DISPLAY SW
T PRIORITY SCART
BY SW
E
AM SW
AM SW
BUFFER
AMP3
AMP2
AMP1
BUFFER
UT
EO IN
N
EO BUFFER
UT
N
SW
W
AM SW
C (3.58) SW
C (4.43) SW
UFFER
UFFER
UFFER
AM TRAP SW
C TRAP SW
UT
AM SW
/SECAM SW
V
SW
C (3.58) SW
AMP
EO AMP
ER
ER
EO AMP
EO BUFFER
MP BIAS
EO CLAMP
MP BIAS

BUFFER
AMP
IFFER
IFFER
IFFER
IFFER
BUFFER
IFFER
AMP
AMP
AMP
UFFER
MP
EM SW
IFFER
IFFER
MUTE

AT STBY
ECT
ECT
ECT
ECT
ECT
ECT
ECT
ECT
ECT
ECT
ECT
ECT

ECT

SW
EM SW
ECT SW
D AMP
D AMP

KV-C2951Đ	
343	2.2k 1/10W
1308	4.7K 1/10W
-73	3P

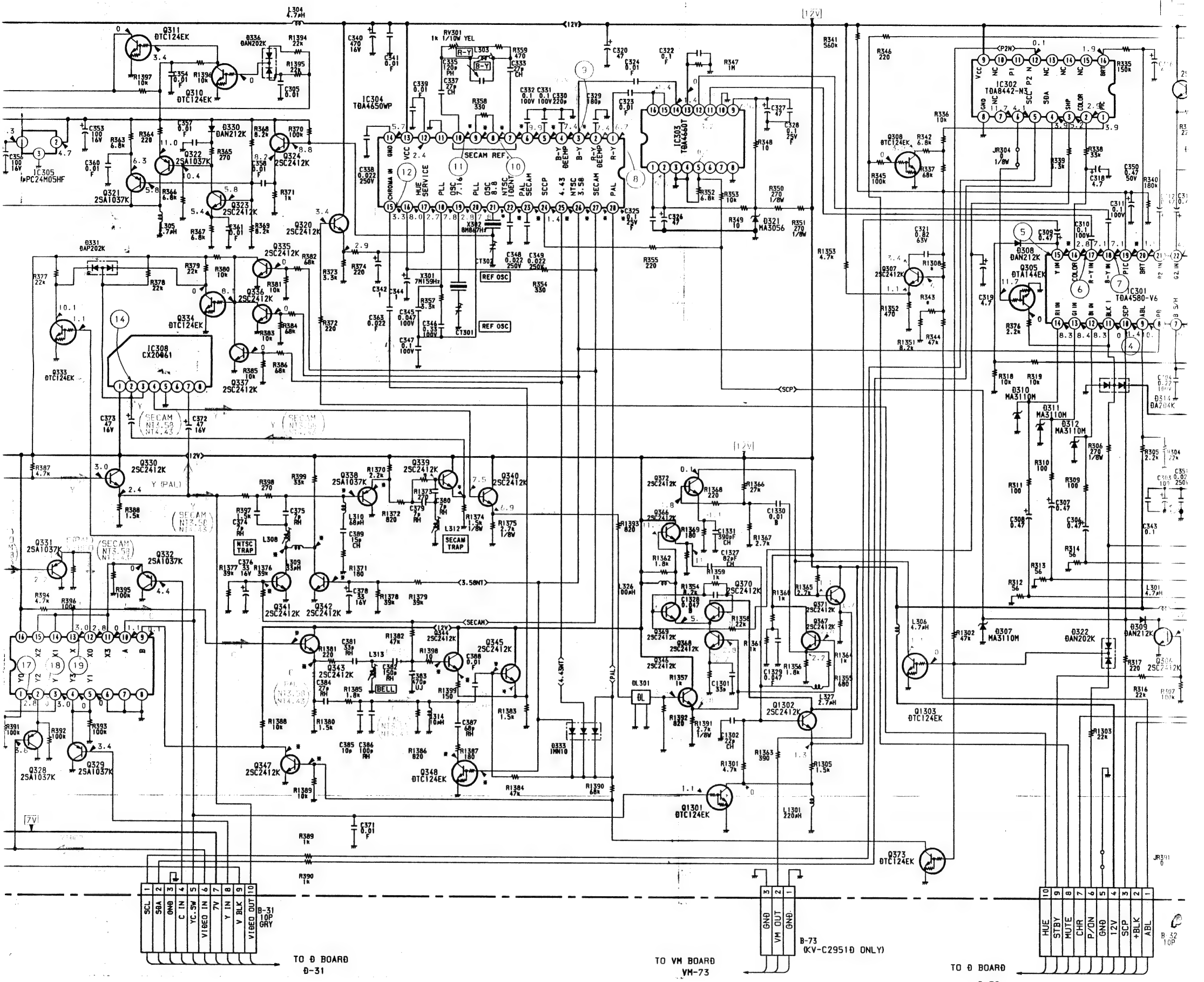
IC304 TDA4650WP
IC303 TDA4660T
IC302 TDA8442-N3
IC301 TDA4580-V6
IC305 μPC24M05HF
IC308 CX20461
X301 7M159Hz
X302 8M867Hz
REF OSC
SECAM REF
SECAM TRAP
NTSC TRAP
BELL
JR304
JR391
B-31 10P GRY
TO D BOARD D-31
B-73 (KV-C2951D ONLY)
TO VM BOARD VM-73
B-32 10P
TO D BOARD D-32

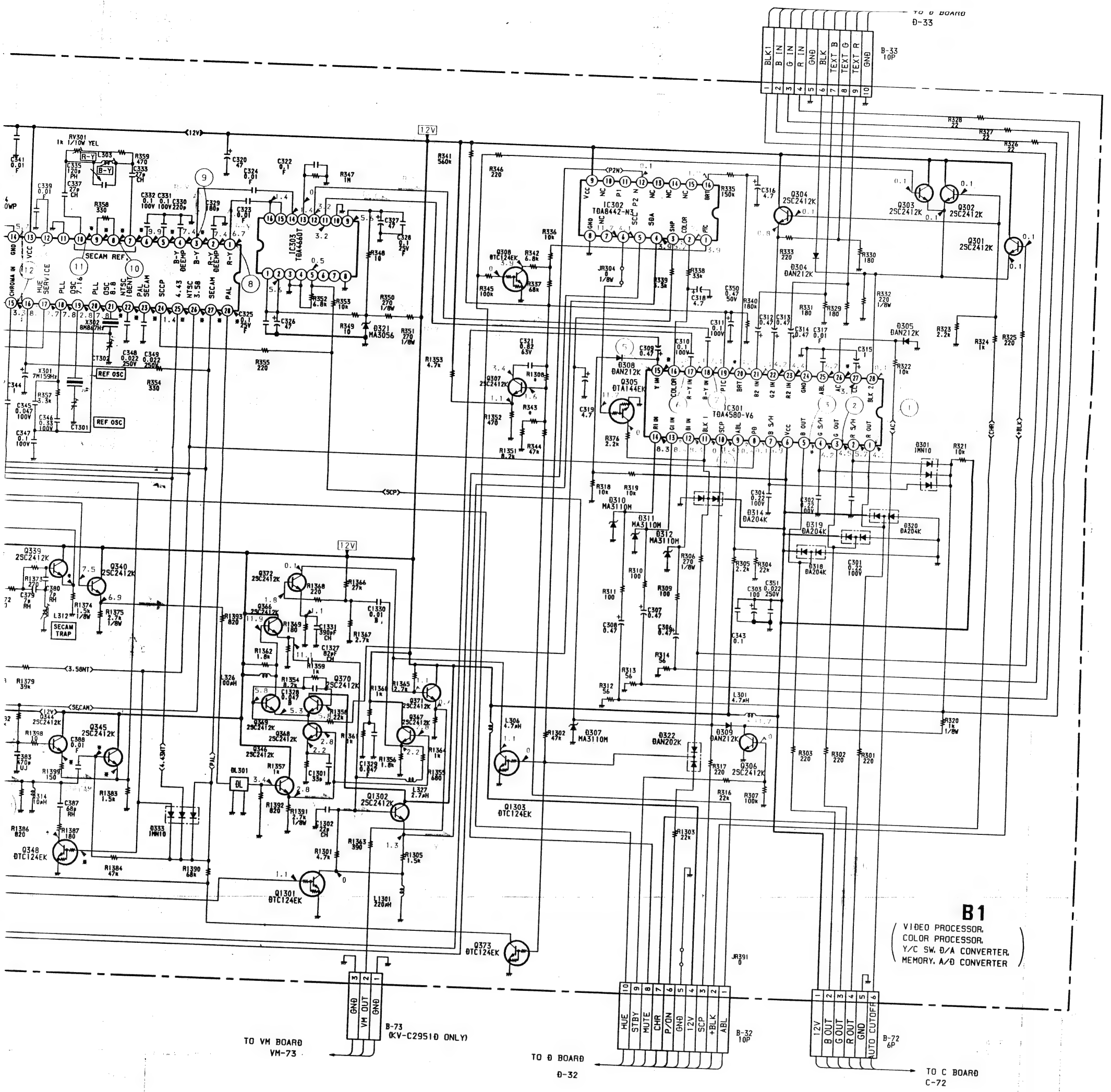
TO D BOARD
D-33
B-33
10P
BLK1
B IN
G IN
R IN
GND
BLK
TEXT B
TEXT G
TEXT R
GND
B1
VIDEO PROCESSOR,
COLOR PROCESSOR,
Y/C SW, D/A CONVERTER,
MEMORY, A/D CONVERTER
TO VM BOARD
VM-73
B-73
(KV-C2951D ONLY)
TO D BOARD
D-32
B-32
10P
TO C BOARD
C-72
B-72
6P

B1

VIDEO PROCESSOR, COLOR PROCESSOR, Y/C SW, D/A CONVERTER, MEMORY, CONVERTER

Note :

- ▒▒▒
- ▒▒▒

—B1 Board—

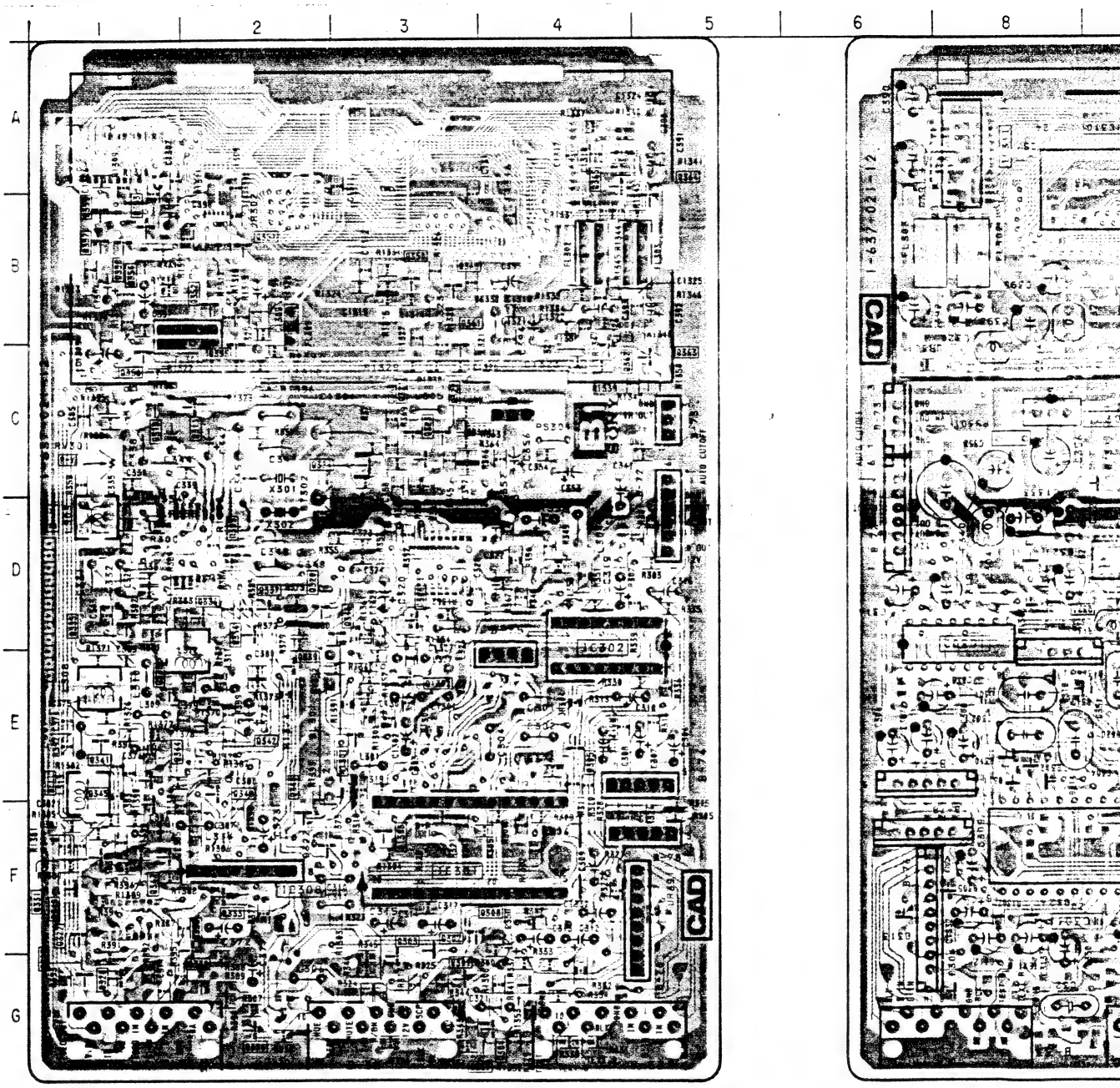

Note :

- ▒▒▒ : Pattern from the side which enables seeing.
- ▒▒▒ : Pattern of the rear side.

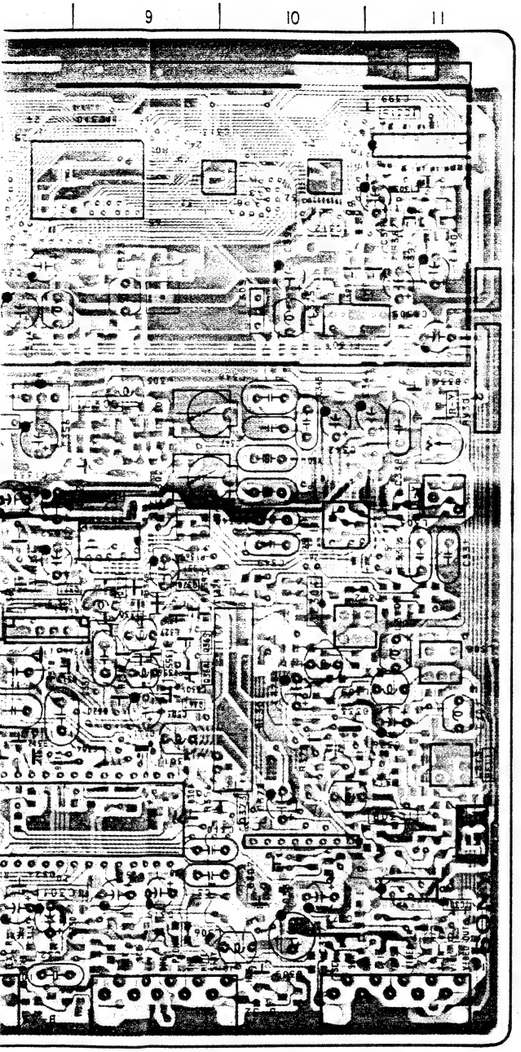

IC	
IC301	F-8
IC302	E-8
IC303	D-9
IC304	D-10
IC305	C-8
IC306	F-11
IC308	F-10
IC310	A-9
IC311	A-8
IC312	A-10
IC313	A-9
IC315	A-11

TRANSISTOR	
Q301	G-3
Q302	F-3
Q303	F-3
Q304	G-4
Q305	E-4
Q306	G-2
Q307	G-4
Q308	F-3
Q310	C-1
Q311	C-2
Q320	D-2
Q321	C-3
Q322	C-3
Q323	C-3
Q324	C-3
Q327	F-1
Q328	G-1
Q329	G-1
Q330	F-2
Q331	F-1
Q332	G-2
Q333	F-2
Q334	D-2
Q335	D-1
Q336	D-2
Q337	D-2
Q338	E-1
Q339	E-2
Q340	F-2
Q341	E-1
Q342	E-2
Q343	F-1
Q344	E-1
Q345	F-1
Q346	D-3
Q347	F-1
Q348	E-2
Q350	B-3
Q352	B-2
Q353	B-1
Q354	B-1
Q355	C-2
Q356	C-1
Q357	B-1
Q358	B-1
Q359	B-1
Q360	B-3
Q361	C-3
Q362	C-4
Q363	C-5
Q364	B-5
Q365	A-4
Q366	D-3
Q367	E-9
Q368	E-9
Q369	E-9
Q370	D-9
Q371	D-9
Q372	D-9
Q373	F-10
Q1301	E-3
Q1302	E-3
Q1303	F-3

DIODE	
D301	E-9
D304	G-8
D305	F-8
D307	F-10
D308	F-9
D309	G-10
D310	E-8
D311	E-8
D312	E-8
D314	E-8
D318	E-8
D319	E-8
D320	E-9
D321	D-8
D322	F-2
D330	D-9
D331	F-10
D333	E-10
D336	C-11
D340	B-10
D341	B-11

VARIABLE RESISTOR	
RV301	C-11

TRIMMER	
CT301	C-9
CT302	C-9

COIL	
L303	D-11
L308	E-11
L312	D-10
L313	E-11

B1 BOARD IC301 TDA4580-V6

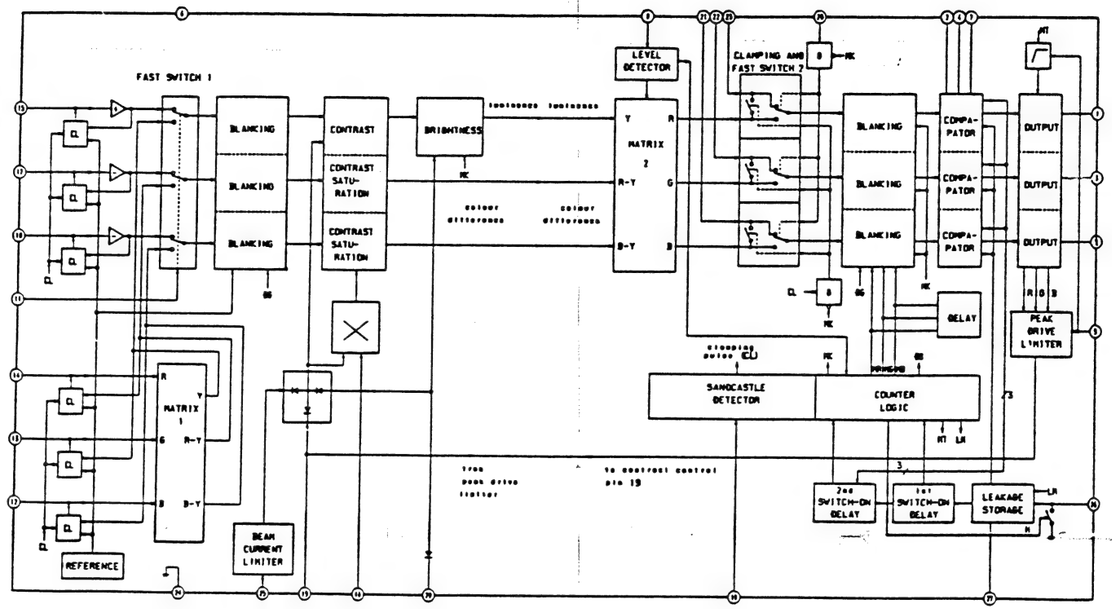

B1 BOARD IC302 TDA8442-N3

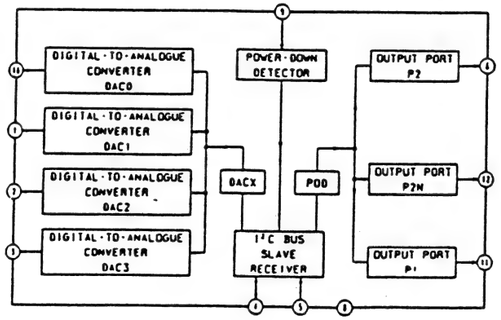

B1 BOARD IC303 TDA4660T

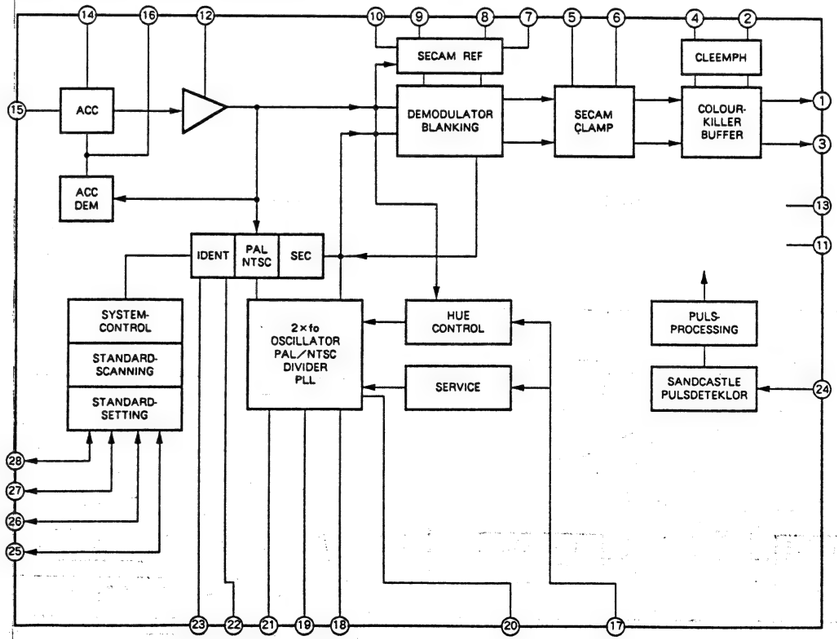

D BOARD IC251/261 TDA2050

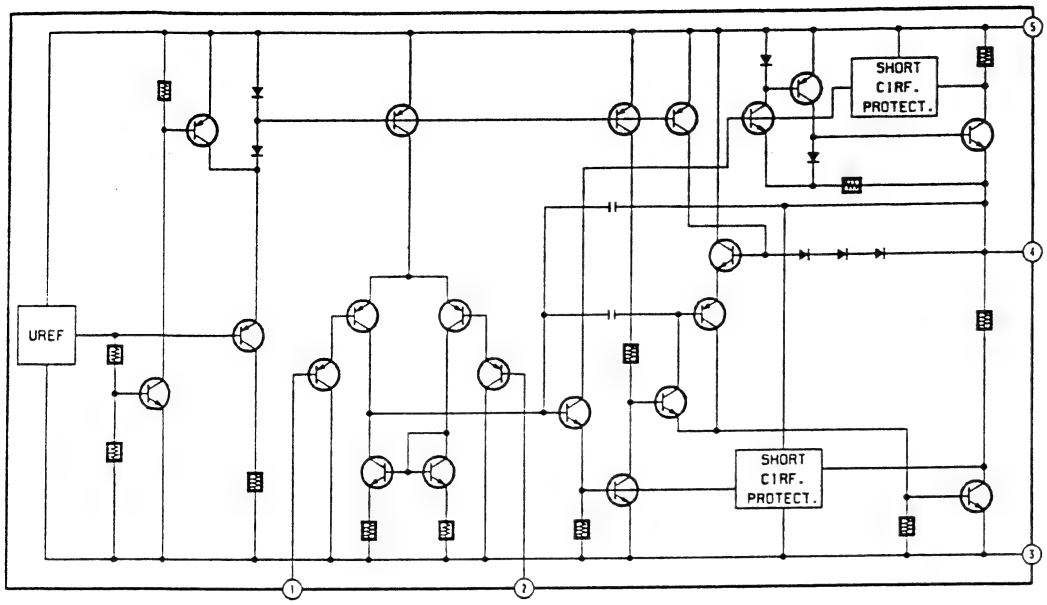

D BOARD IC501 TEA2028B

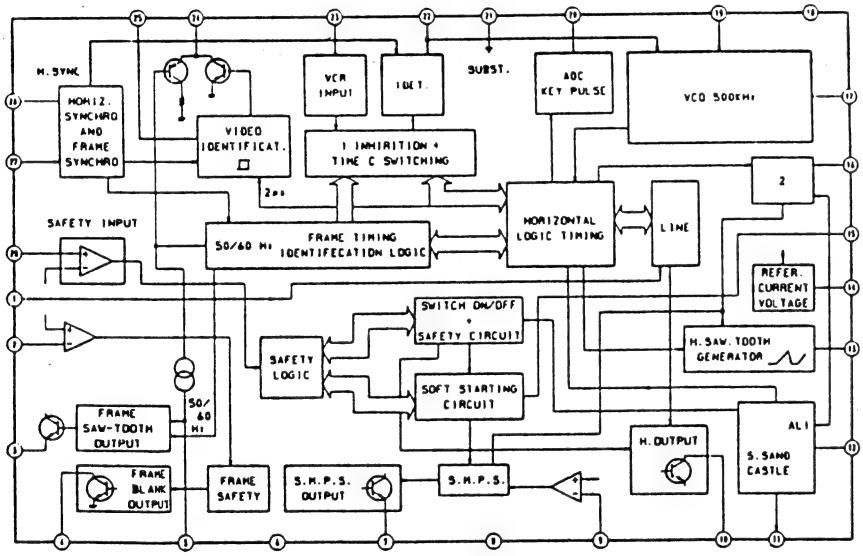

D BOARD IC502 TDA8170

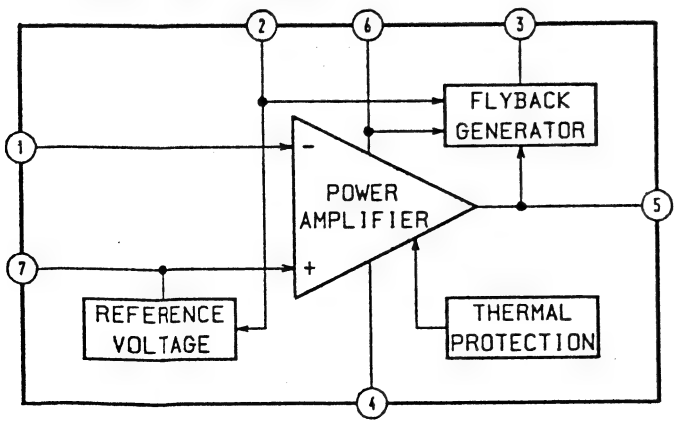

D BOARD IC601 TEA2260

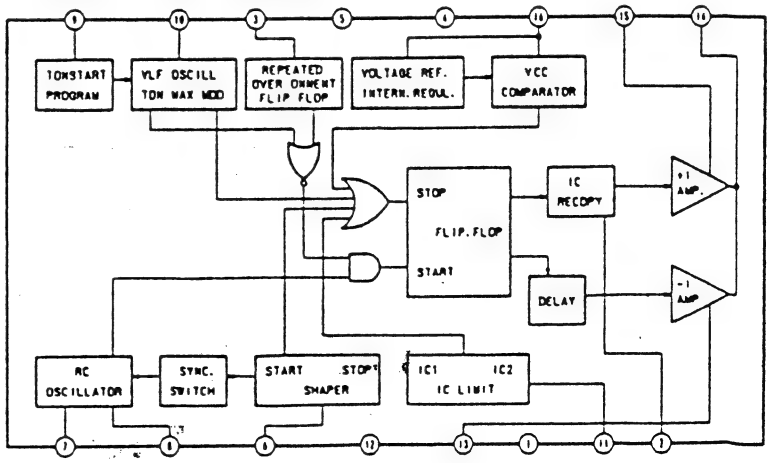

D [TUNING CONTROL, POWER CONTROL, AUDIO OUT, H/V OUT]

—D Board—

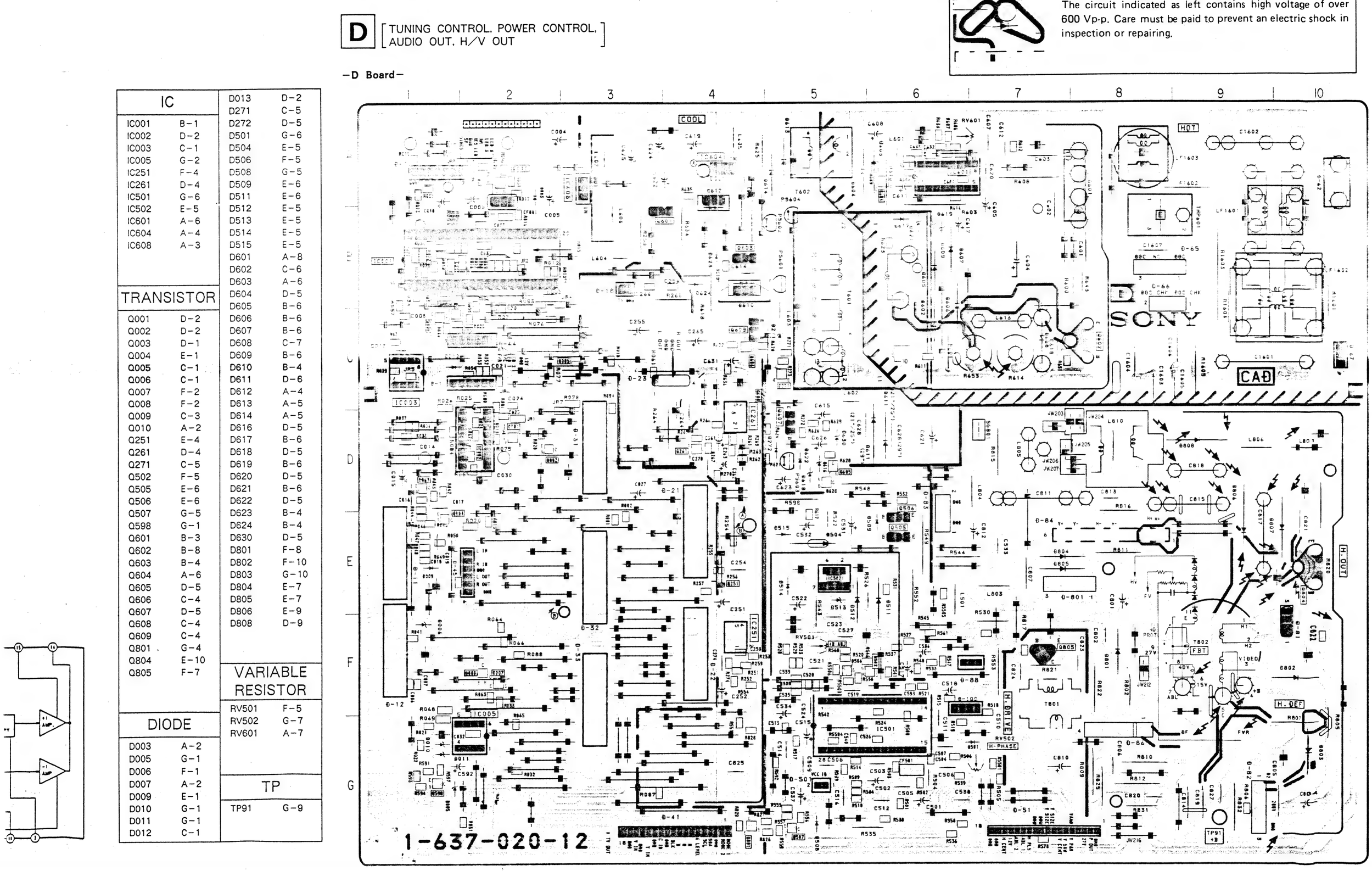

The circuit indicated as left contains high voltage of over 600 Vp-p. Care must be paid to prevent an electric shock in inspection or repairing.

IC	
IC001	B-1
IC002	D-2
IC003	C-1
IC005	G-2
IC251	F-4
IC261	D-4
IC501	G-6
IC502	E-5
IC601	A-6
IC604	A-4
IC608	A-3

TRANSISTOR	
Q001	D-2
Q002	D-2
Q003	D-1
Q004	E-1
Q005	C-1
Q006	C-1
Q007	F-2
Q008	F-2
Q009	C-3
Q010	A-2
Q251	E-4
Q261	D-4
Q271	C-5
Q502	F-5
Q505	E-6
Q506	E-6
Q507	G-5
Q598	G-1
Q601	B-3
Q602	B-8
Q603	B-4
Q604	A-6
Q605	D-5
Q606	C-4
Q607	D-5
Q608	C-4
Q609	C-4
Q801	G-4
Q804	E-10
Q805	F-7

DIODE	
D003	A-2
D005	G-1
D006	F-1
D007	A-2
D009	E-1
D010	G-1
D011	G-1
D012	C-1
D013	D-2
D271	C-5
D272	D-5
D501	G-6
D504	E-5
D506	F-5
D508	G-5
D509	E-6
D511	E-6
D512	E-5
D513	E-5
D514	E-5
D515	E-5
D601	A-8
D602	C-6
D603	A-6
D604	D-5
D605	B-6
D606	B-6
D607	B-6
D608	C-7
D609	B-6
D610	B-4
D611	D-6
D612	A-4
D613	A-5
D614	A-5
D616	D-5
D617	B-6
D618	D-5
D619	B-6
D620	D-5
D621	B-6
D622	D-5
D623	B-4
D624	B-4
D630	D-5
D801	F-8
D802	F-10
D803	G-10
D804	E-7
D805	E-7
D806	E-9
D808	D-9

VARIABLE RESISTOR	
RV501	F-5
RV502	G-7
RV601	A-7

TP	
TP91	G-9

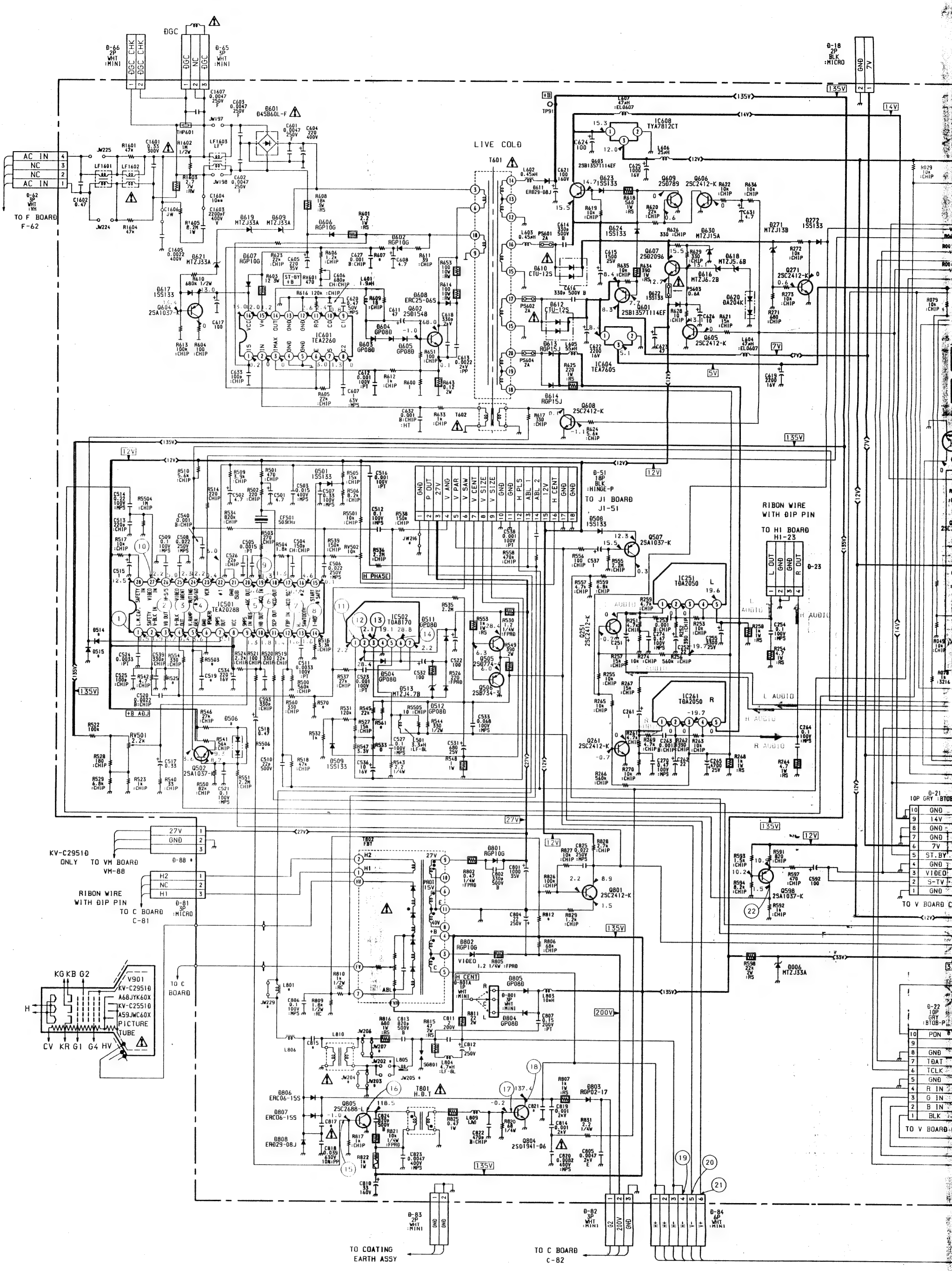
AC IN
TO F BOARD
F-62
LIVE COLD
IC601 TEA2260
IC501 TEA2028B
IC502 T0A8170
IC608 TYA7812CT
IC604 TEA7605
IC251 T0A2050 L
IC261 T0A2050 R
H PHASE
H CENT
RIBON WIRE WITH 0IP PIN
TO H1 BOARD H1-23
TO J1 BOARD J1-51
TO V BOARD
TO C BOARD C-81
KV-C29510 ONLY TO VM BOARD VM-88
TO COATING EARTH ASSY
TO C BOARD c-82
KG KB G2
CV KR G1 G4 HV
V901 KV-C29510 A68JYK60X KV-C25510 A59JWC60X PICTURE TUBE
135V
12V
27V
200V
14V
7V
5V

TUNING CONTROL, POWER CONTROL, AUDIO OUT, H/V OUT

D

TO J1 BOARD J1-44

TO H2 BOARD H2-2

D-18 2P BLK :MICRO — GND, 7V

D-44 6P WHT :S-MICRO — F/R, Y/C, LED 1, LED 2, GND, 12V

D-2 7P WHT :S-MICRO — LEDB, LEDA, NC, RES.LED, GND, +5V, SIRCS

IC001 SDA20560-A008

IC005 SDA2546

IC002 MC14051BCP

IC003 BA4558

IC251 TDA2050 L

IC261 TDA2050 R

RIBON WIRE WITH DIP PIN

TO H1 BOARD H1-23

D-23 — L OUT, GND, GND, R OUT

TO H1 BOARD H1-1

D-1 6P RED :S-MICRO — INT 2, INT 1, LC3, LC2, LC1, GND

D-31 10P GRY :BTOB-P

10	V IN
9	V BLANK
8	Y OUT
7	7V
6	V OUT
5	YC-SWITCH
4	C OUT
3	GND
2	SDA
1	SCL

TO B1 BOARD B1-31

D-21 10P GRY :BTOB-P

10	GND
9	14V
8	GND
7	GND
6	7V
5	ST.BY
4	GND
3	VIDEO
2	S-TV
1	GND

TO V BOARD CNV-1

10	HUE
9	ST.BY
8	MUTE
7	CHAR
6	P/ON
5	GND
4	+12V
3	SCP
2	+BLK
1	ABL

TO B1 BOARD B1-32

D-32 10P GRY :BTOB-P

D-22 10P GRY :BTOB-P

10	PON
9	
8	GND
7	TDAT
6	TCLK
5	GND
4	R IN
3	G IN
2	B IN
1	BLK

TO V BOARD CNV-2

1	BLK1
2	B OUT
3	G OUT
4	R OUT
5	GND
6	BLK
7	TEXT B
8	TEXT G
9	TEXT R
10	GND

TO B1 BOARD B1-33

D-33 10P GRY :BTOB-P

D-11 10P

1	C1MT
2	C2MT
3	C4
4	L IN
5	GND
6	R IN
7	4-LEVEL
8	NC
9	GND
10	GND

TO A BOARD A-11

1	GND
2	VIDEO IN
3	GND
4	AFT
5	33V
6	5V
7	SCL
8	SDA
9	GND
10	12V

D-12 10P

TO A BOARD A-12

1	MODE 1
2	MODE 2
3	GND
4	SDA
5	SCL
6	4 LEVEL
7	R
8	G
9	B
10	BLK
11	GND
12	C IN
13	GND
14	Y IN
15	GND
16	V IN
17	GND
18	V TV OUT

D-41 18P

TO J1 BOARD J1-41

D-45 6P — GND, R OUT, L OUT, GND, R IN, L IN

TO J1 BOARD J1-44

D-84 6P WHT :MINI — H, H-, V-, V+

DY

H.GY, H.GY V.GY, V.GY

• D BOARD

IC001	SØA20560-A008	TUNING CTL
IC002	MC14051BCP	ON SCREEN ØISPLAY
IC003	BA4558	AFT COMPARATORE
IC005	SØA2546	MEMORY
IC251	TØA2050	AUØIO OUT (L)
IC261	TØA2050	AUØIO OUT (R)
IC501	TEA2028B	ØEFLECTION PROCESSOR
IC502	TØA8170	V OUT
IC601	TEA2260	PRIMARY SMPS CTL
IC604	TEA7605	+5V REG
IC608	TYA7812CT	+12V REG
Q001	ØTC144EK	50/60Hz SW
Q002	ØTC144EK	BLK SW
Q003	2SA1037-K	SYNC SEPARATOR
Q004	2SA1037-K	SYNC SEPARATOR
Q005	ØTC144EK	Y/C SW
Q006	ØTC144EK	FRONT/REAR SW
Q007	2SC2412-K	MOØE 2 SWITCH
Q008	2SC2412-K	MOØE 1 SWITCH
Q009	2SC2412-K	MUTE SW
Q010	2SC2412-K	RESET
Q251	2SC2412-K	AUØIO MUTE
Q261	2SC2412-K	AUØIO MUTE
Q271	2SC2412-K	VOLTAGE ØETECT
Q502	2SA1037-K	CONSTANT CURRENT SOURCE
Q505	2SØ774-4	V CENT
Q506	2SB743-3	V CENT
Q507	2SA1037-K	CANAL +BLK
Q598	2SA1037-K	VIØEO AMP
Q601	2SB1357T114EF	STBY SW
Q602	2SØ1548	REG OUT
Q603	2SB1357T114EF	STBY SW
Q604	2SA1037-K	FAST ON/OFF
Q605	2SC2412-K	STBY SW
Q606	2SC2412-K	STBY SW
Q607	2SØ2096-EF	+12V REG
Q608	2SC2412-K	STBY SW
Q609	2SØ789-3	STBY SW
Q801	2SC2412-K	ABL AMP
Q804	2SØ1941-06	H OUT
Q805	2SC2688	H ØRIVER
Ø003	1SS133	HUE CTL
Ø005	MTZJ5.6B	PROT
Ø006	MTZJ33A	VC VOLTGE REGULATION
Ø007	MTZJ3.9B	PLOT RESET
Ø009	MTZJ5.6B	CLIPPING SYNC LEVEL
Ø010	MTZJ6.2B	PROT
Ø011	MTZJ6.2B	PROT
Ø012	1SS133	PROT
Ø013	MTZJ6.8C	PROT
Ø271	MTZJ13B	VOLTAGE ØETECT
Ø272	1SS133	ØECOUPING MUTE AUØIO
Ø501	1SS133	START
Ø504	GPØ8Ø	V PULSE OUT
Ø506	ØA204K	CURRENT (KV-C2551Ø ONLY)
Ø508	1SS133	CANEL +BLK LEVEL
Ø509	1SS133	V LIN
Ø511	GPØ8Ø	PROT
Ø512	GPØ8Ø	PROT
Ø513	MTZJ4.7B	PROT
Ø514	1SS133	PROT (KV-C2951Ø ONLY)
Ø515	1SS133	PROT (KV-C2951Ø ONLY)
Ø601	Ø4SB60L-F	AC RECT
Ø602	RGP10G	REF RECT
Ø603	GPØ8Ø	SMPS ØRIVE 1
Ø604	GPØ8Ø	SMPS ØRIVE 2
Ø605	GPØ8Ø	SMPS ØRIVE 3
Ø606	RGP10G	+12V RECT
Ø607	RGP10G	REF RECT
Ø608	ERC25-06S	PLUSE CLIPPER
Ø609	MTZJ33A	FAST ON/OFF-1
Ø610	CTU-12S	+14V RECT
Ø611	ERØ29-08J	+135V RECT
Ø612	CTU-12S	+7V RECT
Ø613	RGP15J	AF V RECT-1
Ø614	RGP15J	AF V RECT-2
Ø616	MTZJ6.2B	+12V REF
Ø617	1SS133	PRIT
Ø618	MTZJ5.6B	+12V REF
Ø619	MTZJ33A	FAST ON/OFF-2
Ø620	ØA204K	+12V REF
Ø621	MTZJ33A	FAST ON/OFF-3
Ø622	1SS133	PROT
Ø623	1SS133	ØECOUPING STBY
Ø624	1SS133	ØECOUPING STBY
Ø630	MTZJ15A	+12V REF
Ø801	RGP10G	+27V RECT
Ø802	RGP10G	+200V RECT
Ø803	RGP02-17	G2 RECT
Ø804	GPØ8Ø	H CENTER-1
Ø805	GPØ8Ø	H CENTER-2
Ø806	ERC06-15S	H ØAMPER-1
Ø807	ERC06-15S	H ØAMPER-2
Ø808	ERØ29-08J	PIN ØAMPER

H1 BOARØ
H1-1

2
1
3
2
1
Ø

6P
MICRO

• WAVEFORMS D BOARD

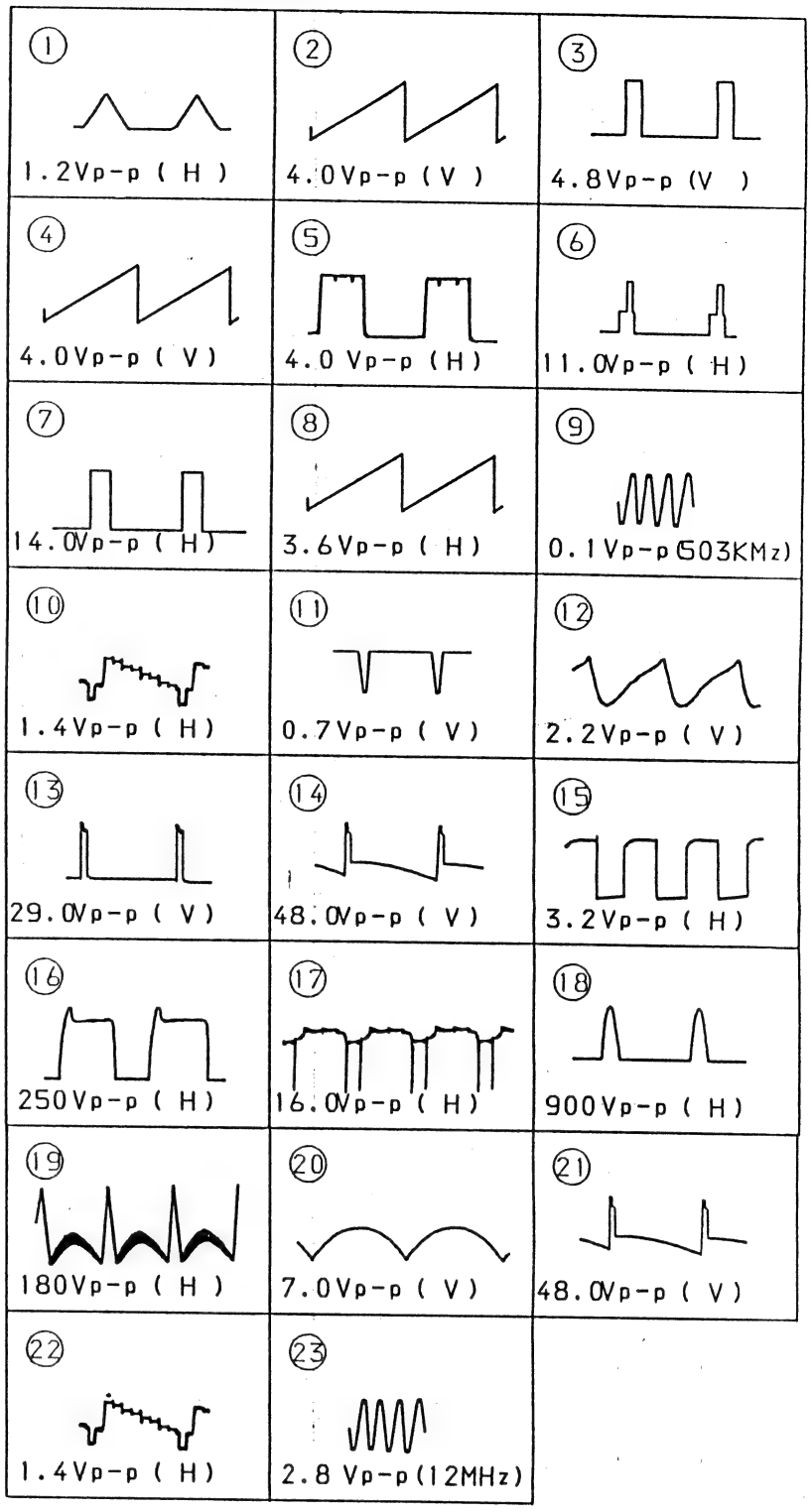

• D BOARD

* MARK

KV-C2551Ø	KV-C2951Ø
C519 0.47	C519 0.33
C815 1	C815 0.82
C817 0.015	C817 0.017
C821 680p 2kV	C821 470p 2kV
Ø506 ØA204K	Ø506 ———
Ø514 JW	Ø514 1SS133
Ø515 ———	Ø515 1SS133
Ø-88 ———	Ø-88 3P
JW202 ———	JW202 X
JW203 X	JW203 ———
JW204 X	JW204 ———
JW205 ———	JW205 X
JW206 X	JW206 ———
JW207 X	JW207 ———
JW216 X	JW216 ———
JW229 X	JW229 ———
L801 ———	L801 3.9mH
R525 1k	R525 ———
R561 ———	R561 270k
R570 ———	R570 680
R607 4.7k	R607 5.6k
R812 68k	R812 51k
R5503 4.7	R5503 10
R5506 ———	R5506 12K

——— NOT MOUNTEØ
X TO BE MOUNTEØ

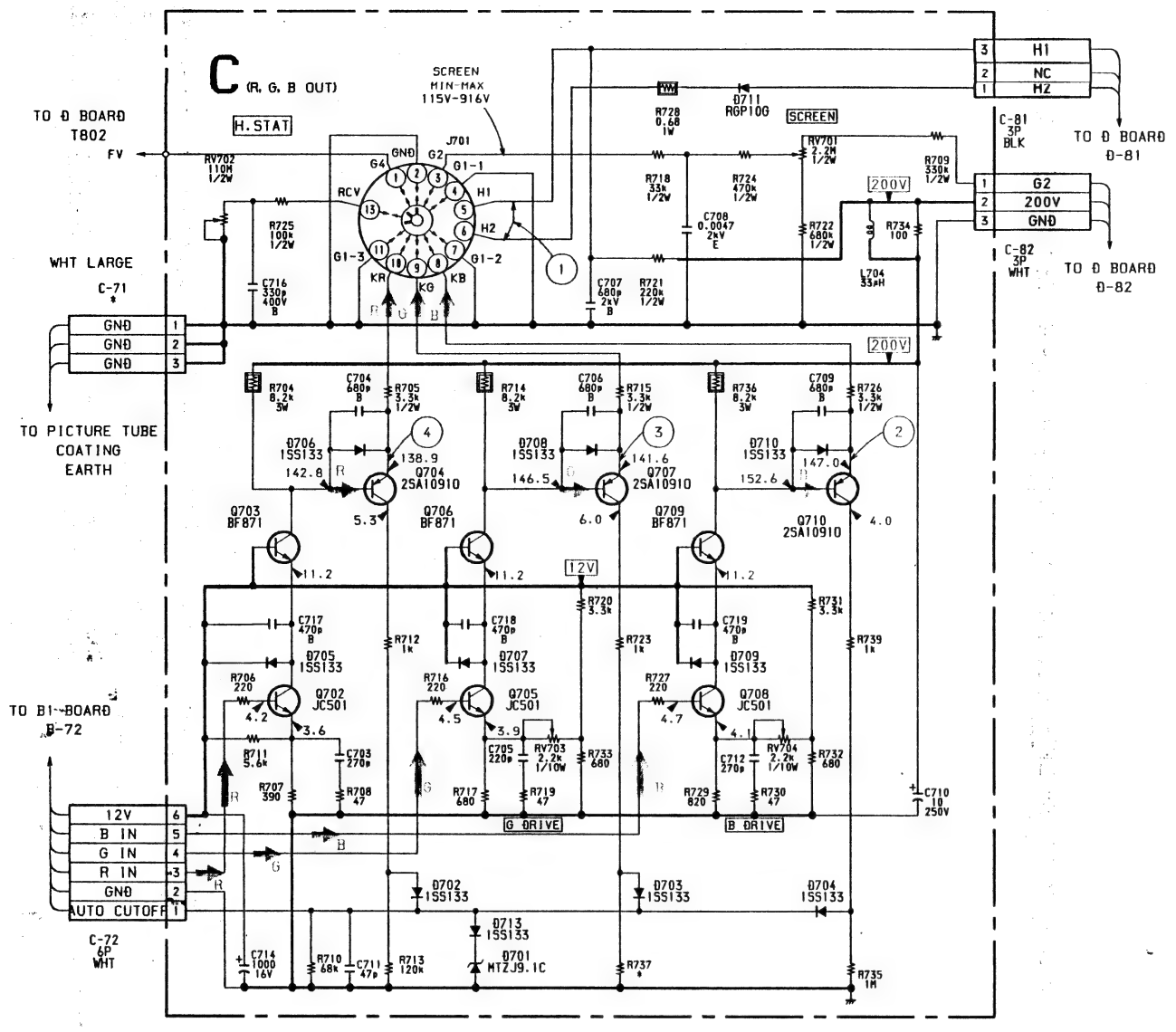

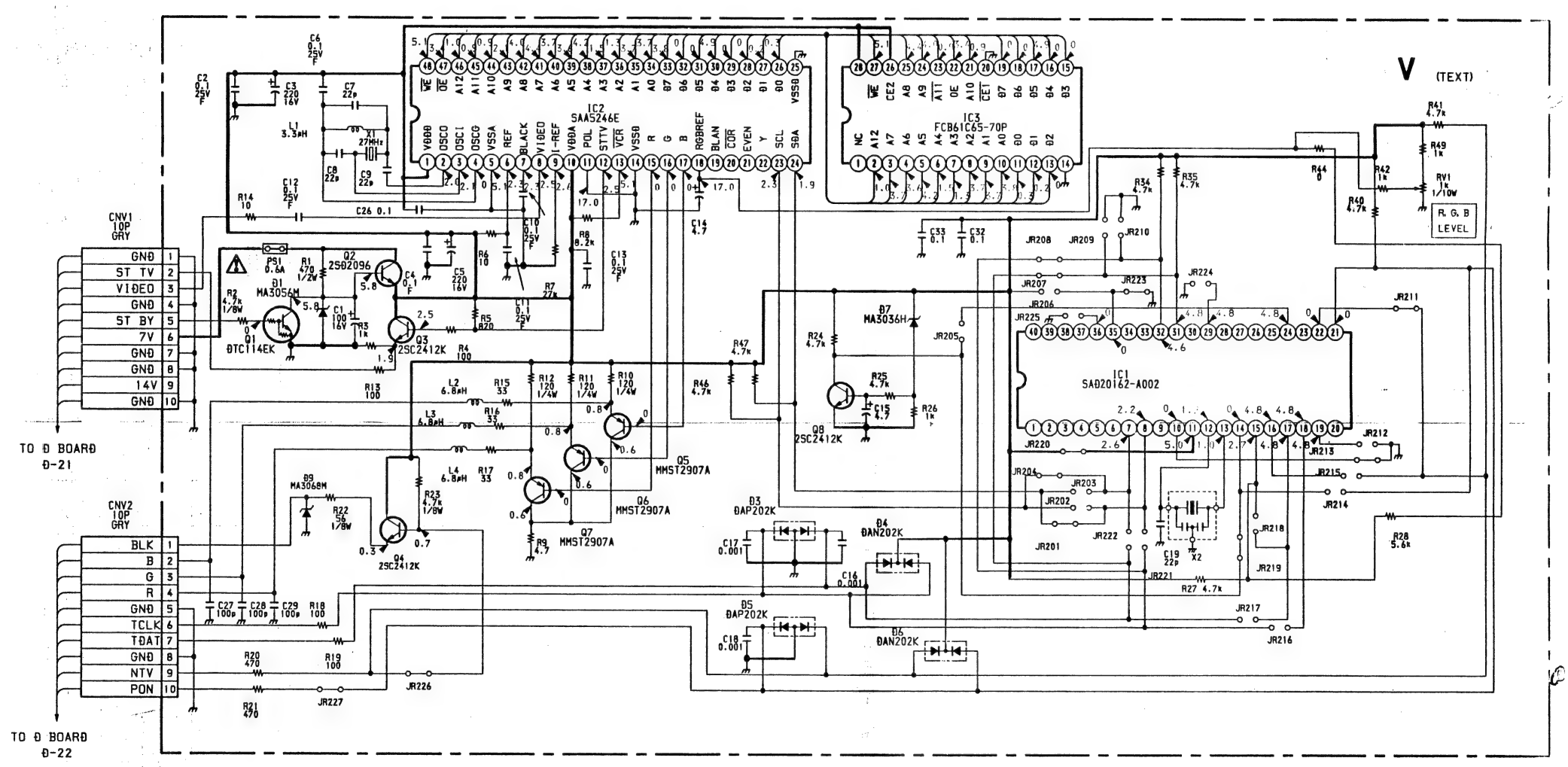

• C BOARD

Q702	JC501	R ÐRIVE
Q703	BF871	R OUT
Q704	2SA10910	ACO MEASURING
Q705	JC501	G ÐRIVE
Q706	BF871	G OUT
Q707	2SA10910	ACO MEASURING
Q708	JC501	B ÐRIVE
Q709	BF871	B OUT
Q710	2SA10910	ACO MEASURING
Ð701	MTZJ9.1C	PROTECT
Ð702	1SS133	PROTECT
Ð703	1SS133	PROTECT
Ð704	1SS133	PROTECT
Ð705	1SS133	PROTECT
Ð706	1SS133	PROTECT
Ð707	1SS133	PROTECT
Ð708	1SS133	PROTECT
Ð709	1SS133	PROTECT
Ð710	1SS133	PROTECT
Ð711	RGP10G	HEATING VOLTAGE REC
Ð713	1SS133	PROTECT

• WAVEFORMS C BOARD

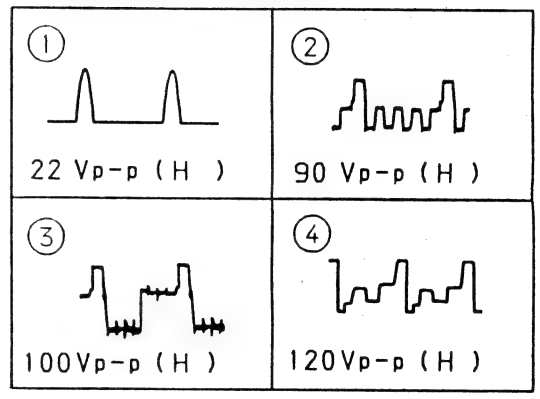

• C BC
* MAR
KV-C
C-71
R737

• V BOARD

IC1	SÐA20162-A002	MICRO-CONT
IC2	SAA5246E	IVT
IC3	FCB61C65-70P	STATIC-RAM
Q1	ÐTC114EK	STANÐ BY
Q2	2SÐ2096	5V REG
Q3	2SC2412K	SYNC BUFFER
Q4	2SC2712K	BLK OUT
Q5	MMST2907A	B OUT
Q6	MMST2907A	G OUT
Q7	MMST2907A	R OUT
Q8	2SC2412K	PON SW
Ð1	MA3056M	5V REG
Ð3	ÐAP202K	PROTECT
Ð4	ÐAN202K	PROTECT
Ð5	ÐAP202K	PROTECT
Ð6	ÐAN202K	PROTECT
Ð7	MA3036H	PROTECT
Ð9	MA3068M	PROTECT

• C BOARD

Q702	JC501	R ĐRIVE
Q703	BF871	R OUT
Q704	2SA10910	ACO MEASURING
Q705	JC501	G ĐRIVE
Q706	BF871	G OUT
Q707	2SA10910	ACO MEASURING
Q708	JC501	B ĐRIVE
Q709	BF871	B OUT
Q710	2SA10910	ACO MEASURING
Đ701	MTZJ9.1C	PROTECT
Đ702	1SS133	PROTECT
Đ703	1SS133	PROTECT
Đ704	1SS133	PROTECT
Đ705	1SS133	PROTECT
Đ706	1SS133	PROTECT
Đ707	1SS133	PROTECT
Đ708	1SS133	PROTECT
Đ709	1SS133	PROTECT
Đ710	1SS133	PROTECT
Đ711	RGP10G	HEATING VOLTAGE REC
Đ713	1SS133	PROTECT

• WAVEFORMS C BOARD

① 22 Vp-p (H)

②

90 Vp-p (H)

③

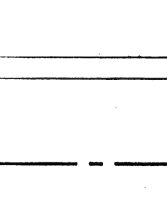

100Vp-p (H)

④

120Vp-p (H)

• C BOARD
* MARK

KV-C2551Đ	KV-C2951Đ
C-71 2P	C-71 3P
R737 820k	R737 470k

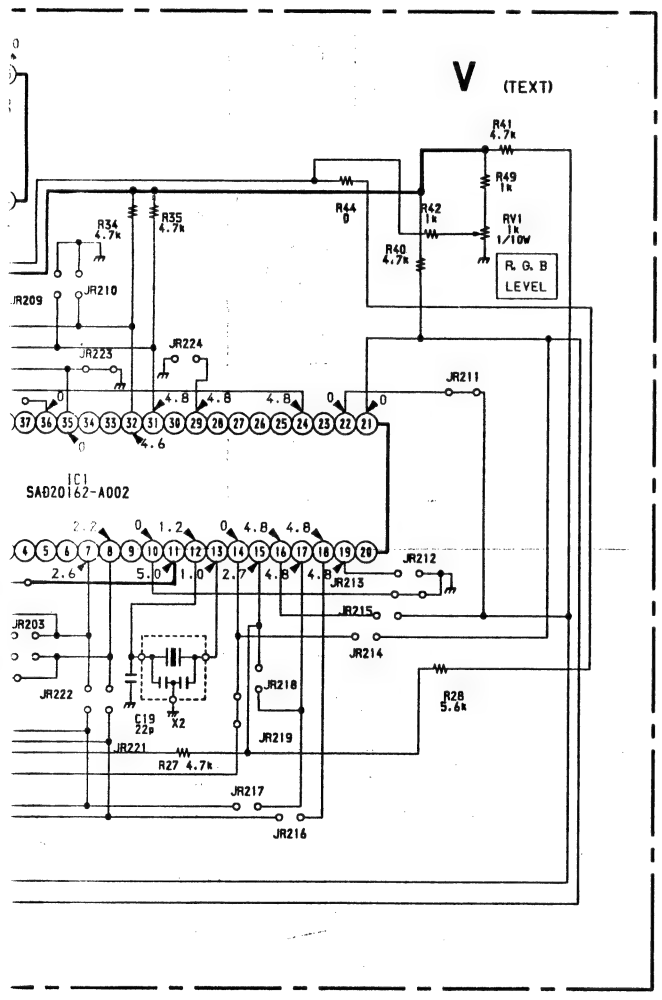

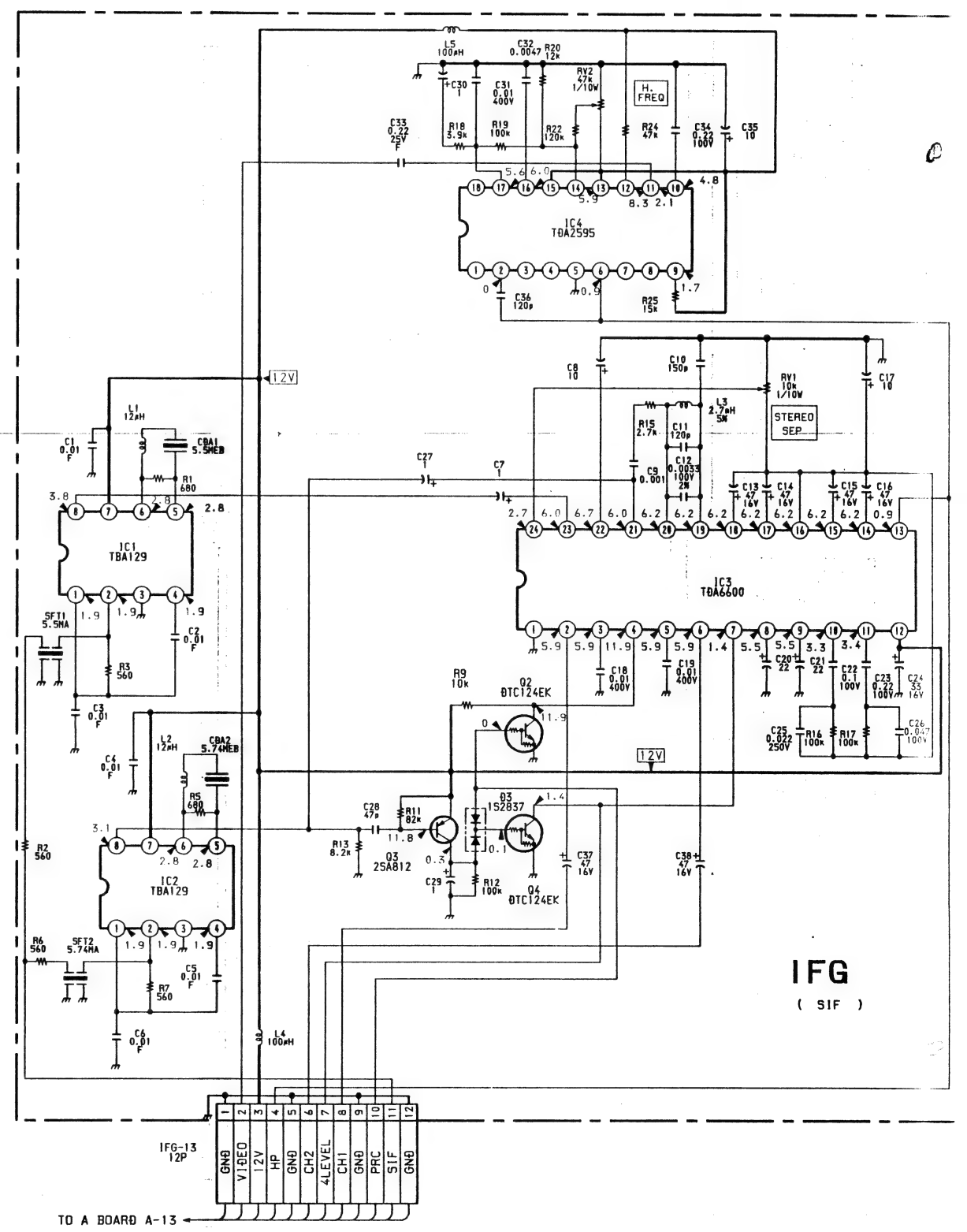

C [R. G. B OUT] **V** [TEXT] **IFG** [SIF]

—C Board—

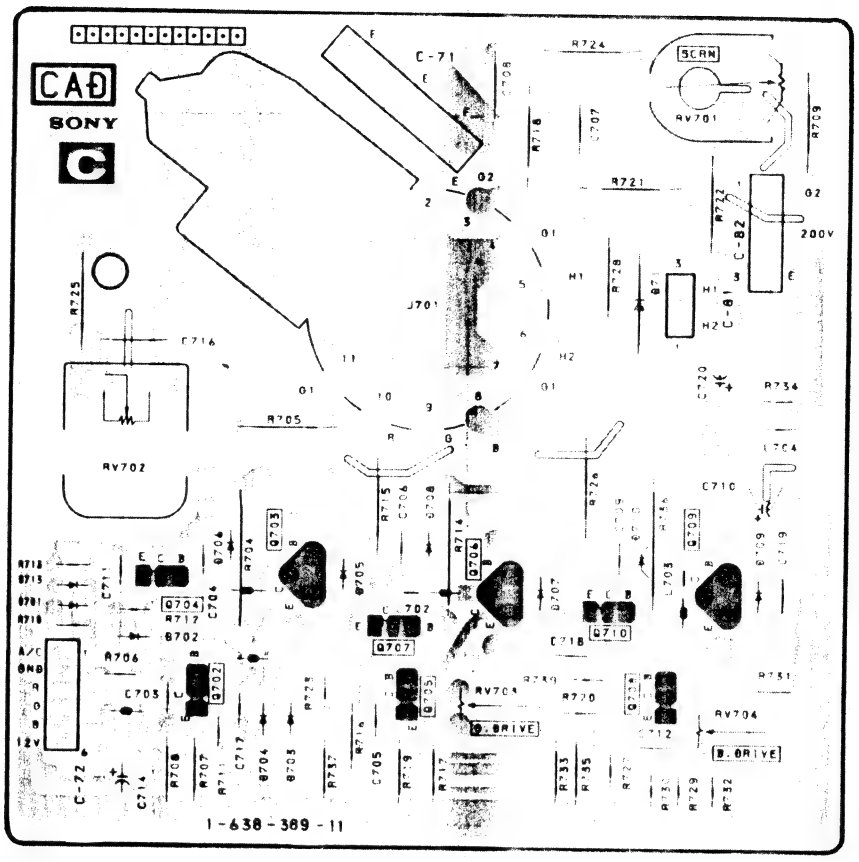

Note :

- ▒▒▒ : Pattern from the side which enables seeing.
- ▒▒▒ : Pattern of the rear side.

—V Board—

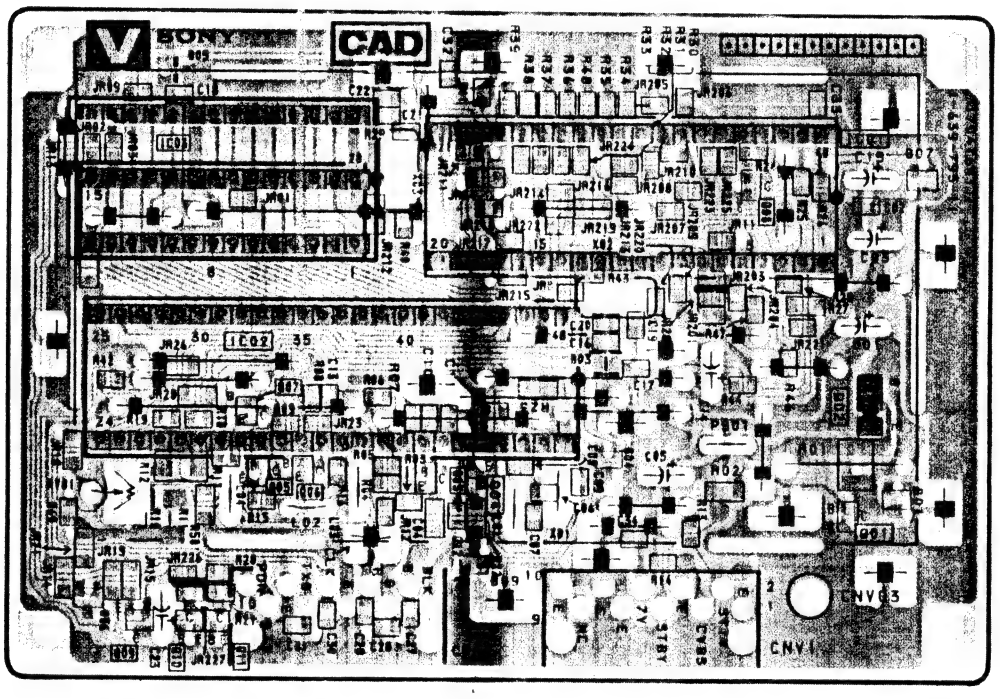

—IFG5.5S Board—

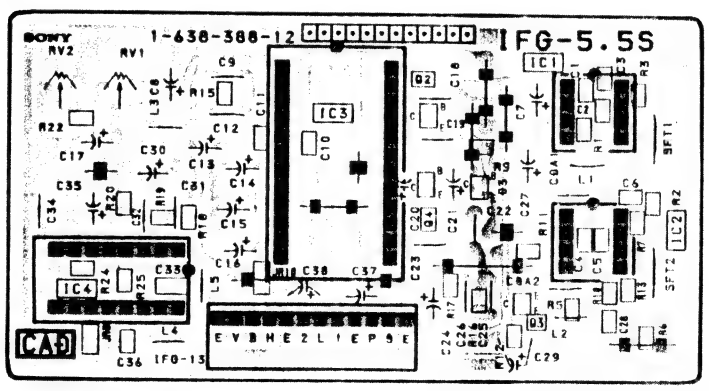

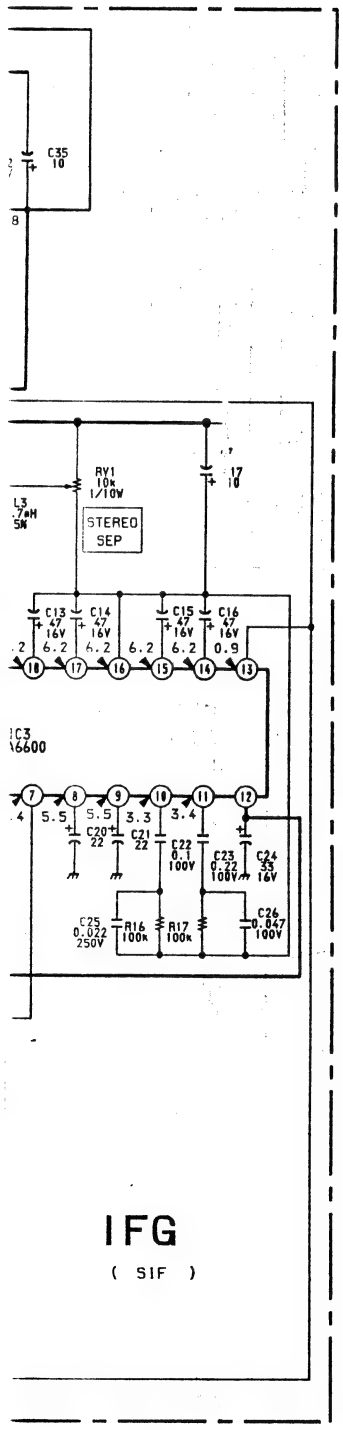

BA4558
RC4558P
SDA2546
TBA129
TEA2014A
TEA2031A

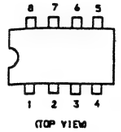

CXA1114P
SDA20162-A002
TDA4580-V6
TDA6200
TEA2028B

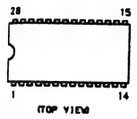

CXD1175AM

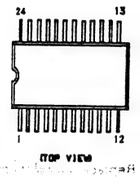

CXD2011Q

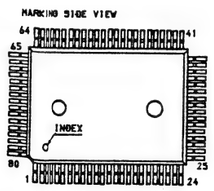

CXK-1202Q

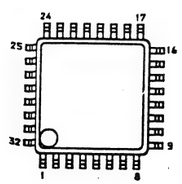

CX20061

FCB61C65-70P
SDA20560-A006

HCF4052BM

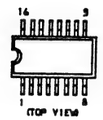

MB40968PF

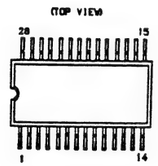

MC14053BCP
PCF8574
TC4051BPHB
TDA4660T
TDA8442-N3
TEA2260

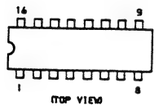

TDA2595/V6

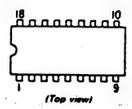

TDA6600-2

SAA5246PE

SBX1610-11

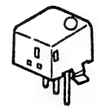

TDA2050

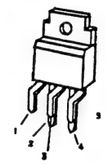

TDA4650WP

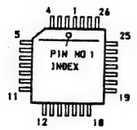

TDA8170

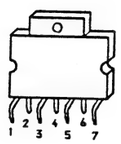

TEA7605
TYA7812CT
μPC24M05HF

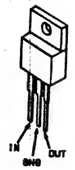

BF871

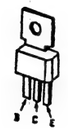

BU508AS1H
2SD1548-LB

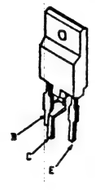

DTA144EK
DTC114EK
DTC124EK
DTC144EK
2SA1162G
2SB1295-UL6
2SC2412K-R

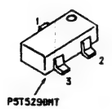

DTC144ES

2SA1091-O

2SA1220A-P
2SC2688-LK

2SB734-34
2SD774-34

2SC2785-HFE

2SD789-34

2SD2096-EF

CTU-12S

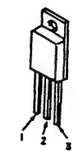

DAN202K
DAN212K
MA152WK

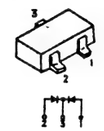

DAP202K
EGP20G

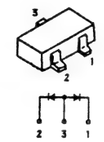

D4SB60L-F

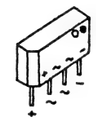

ERC06-15S
RU-3AM

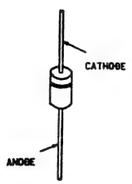

ERD29-08J

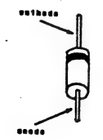

IMN10

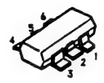

MTZJ-13B
MTZJ-15A
MTZJ-3.9B
MTZJ-33A
MTZJ-36D
MTZJ-6.2B
MTZN-10C
RD5.6ESB2
RD6.8ESB2
RD9.1ESB3
UZ-4.7BSC
1SS119

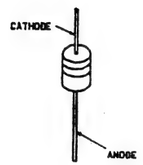

RD11M-B2
RD3.6M-B2
RD5.6M-B2
RD6.8M-B2

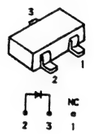

RGP02-17

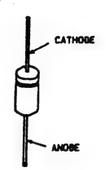

U05G

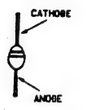

1SS226

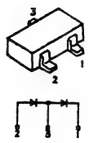

LD-201VR

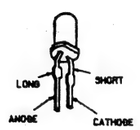

6-1. CHASSIS (KV-C2553E ONLY)

● : BVTP 3×12 7-685-648-79

■ : BVTP 4×16 7-685-663-79

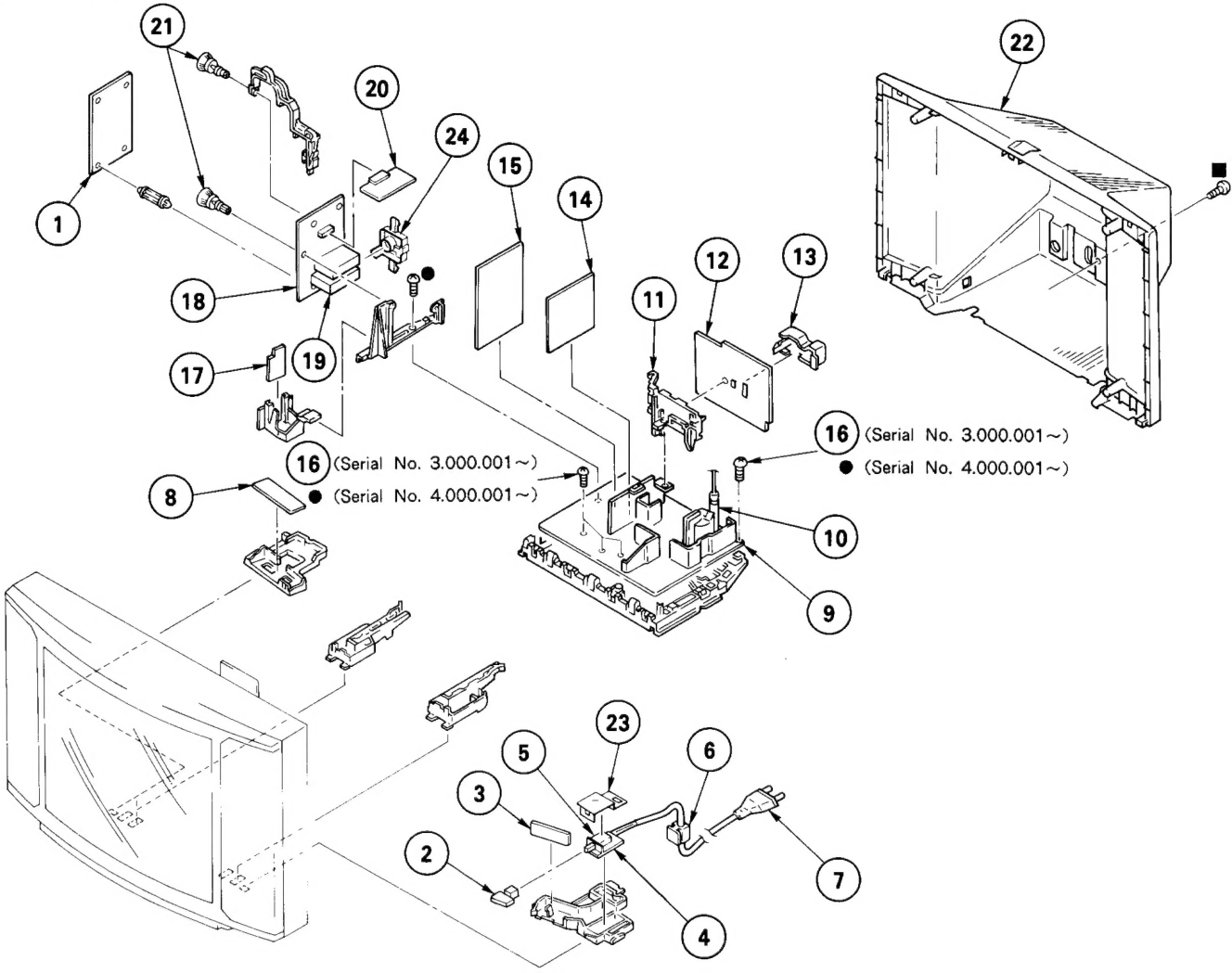

6-2. PICTURE TUBE (KV-C2553E ONLY)

● : BVTP 3×12 7-685-648-79

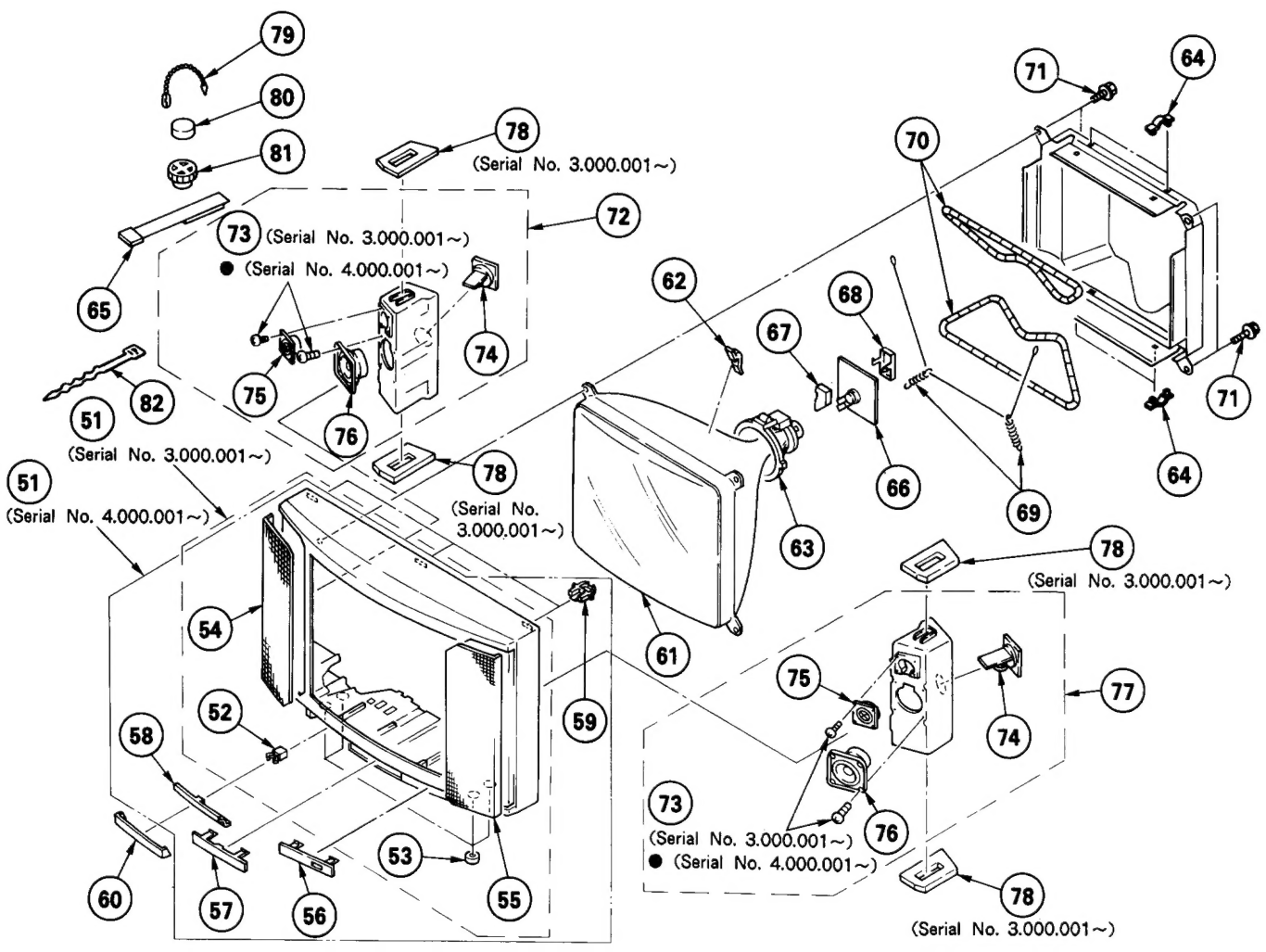

6-3. CHASSIS (KV-C2953E ONLY)

● : BVTP 3×12 7-685-648-79

■ : BVTP 4×16 7-685-663-79

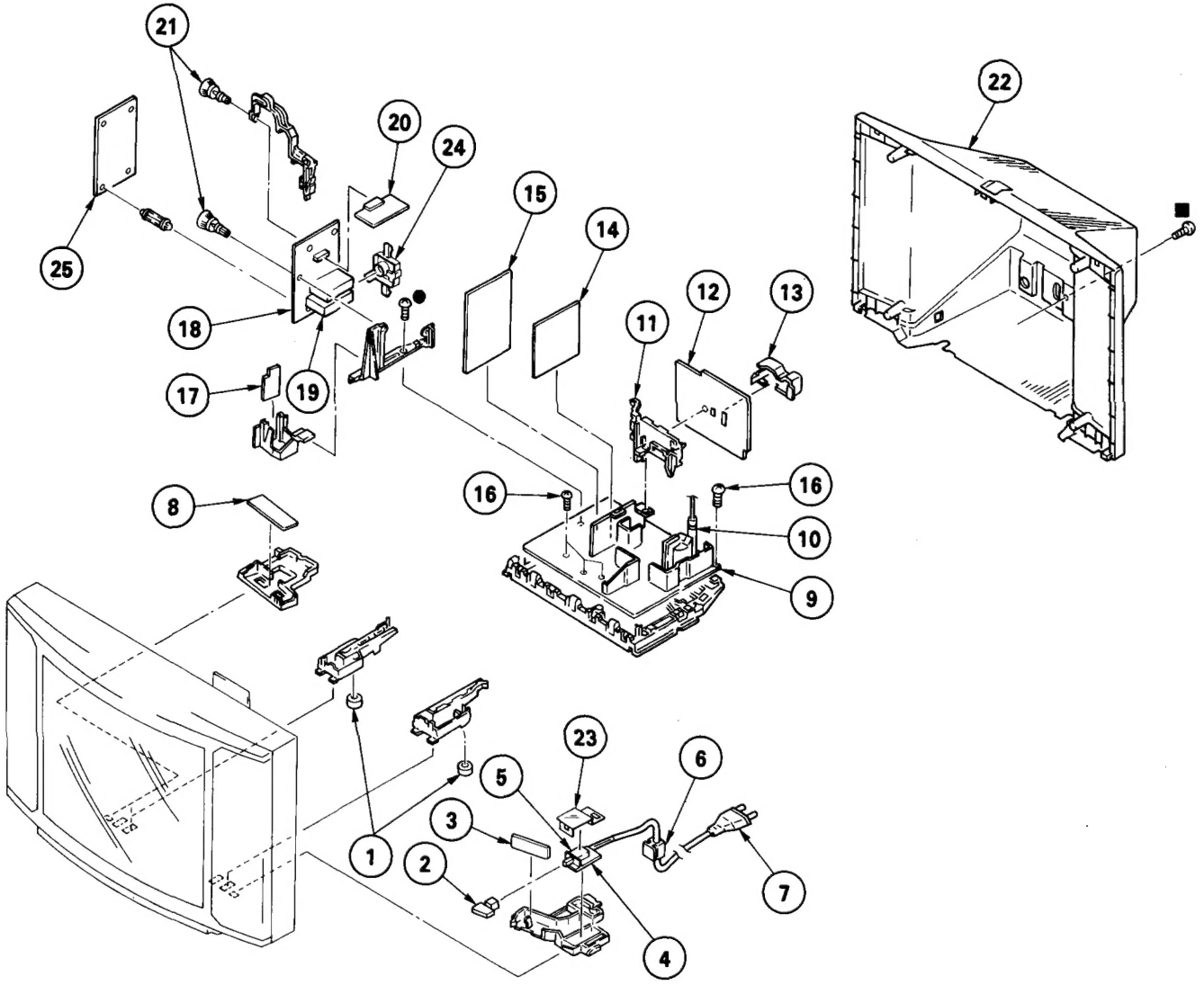
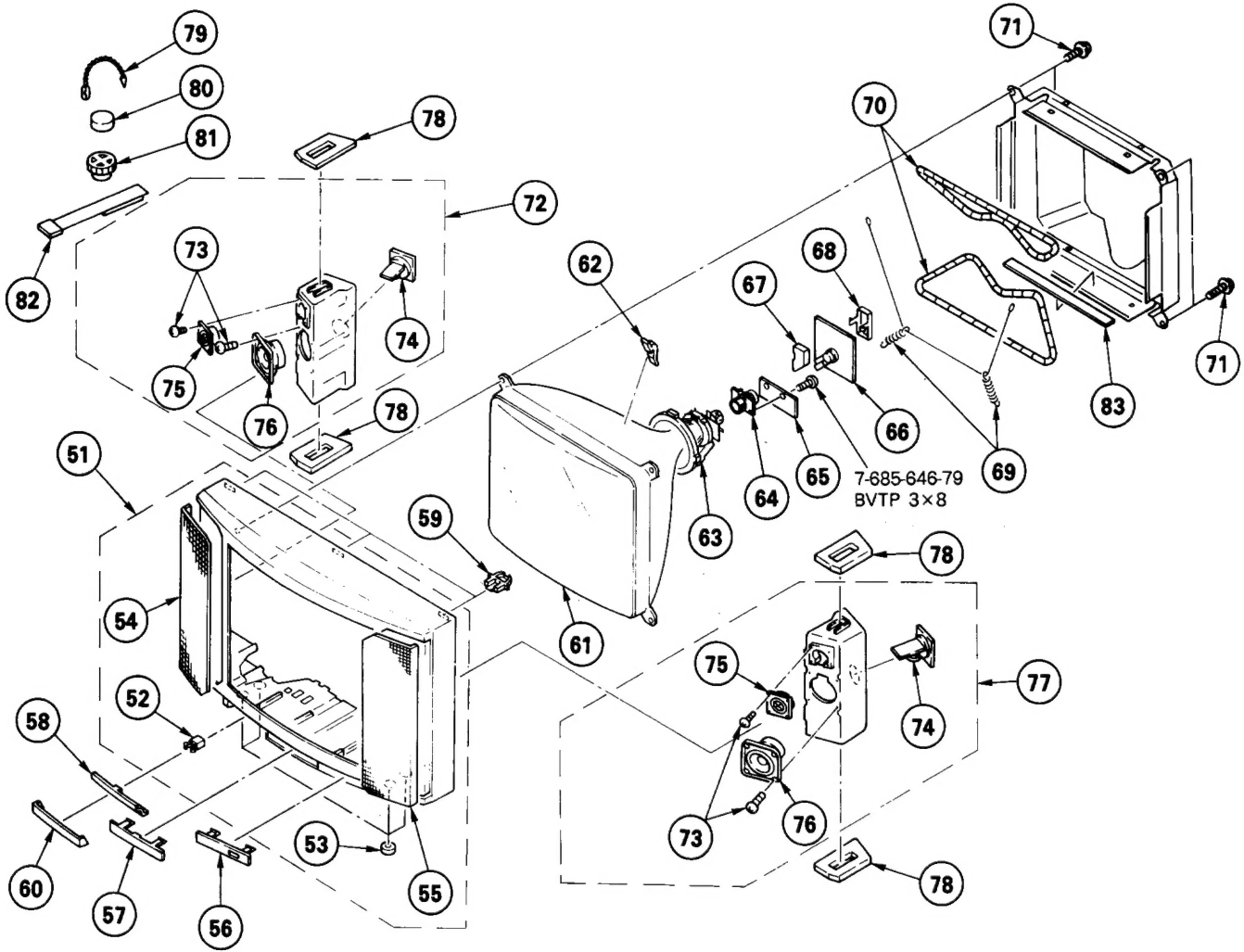
6-4. PICTURE TUBE (KV-C2953E ONLY)